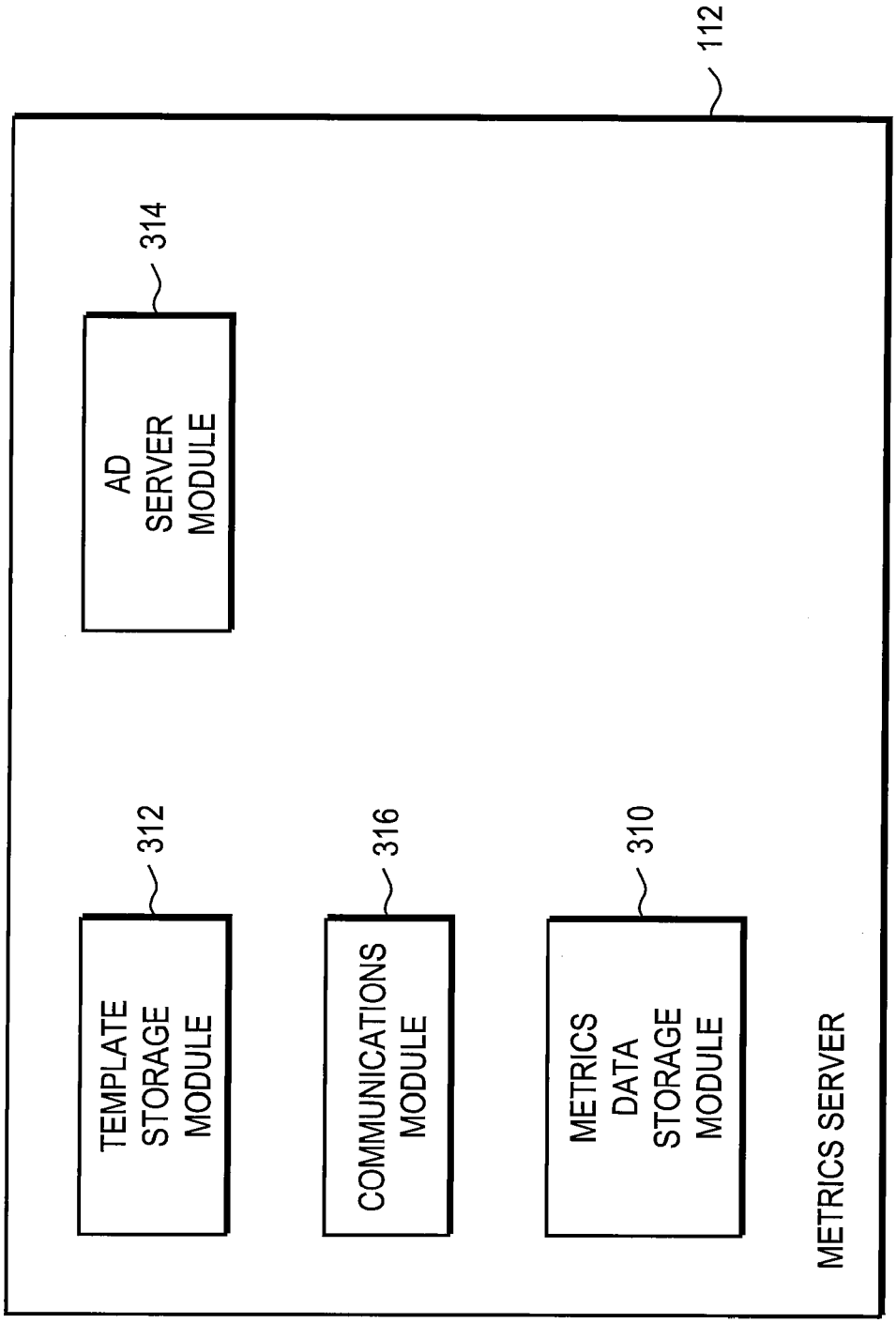
112
314
AD SERVER MODULE
312
TEMPLATE STORAGE MODULE
316
COMMUNICATIONS MODULE
310
METRICS DATA STORAGE MODULE
METRICS SERVER

FIG. 3