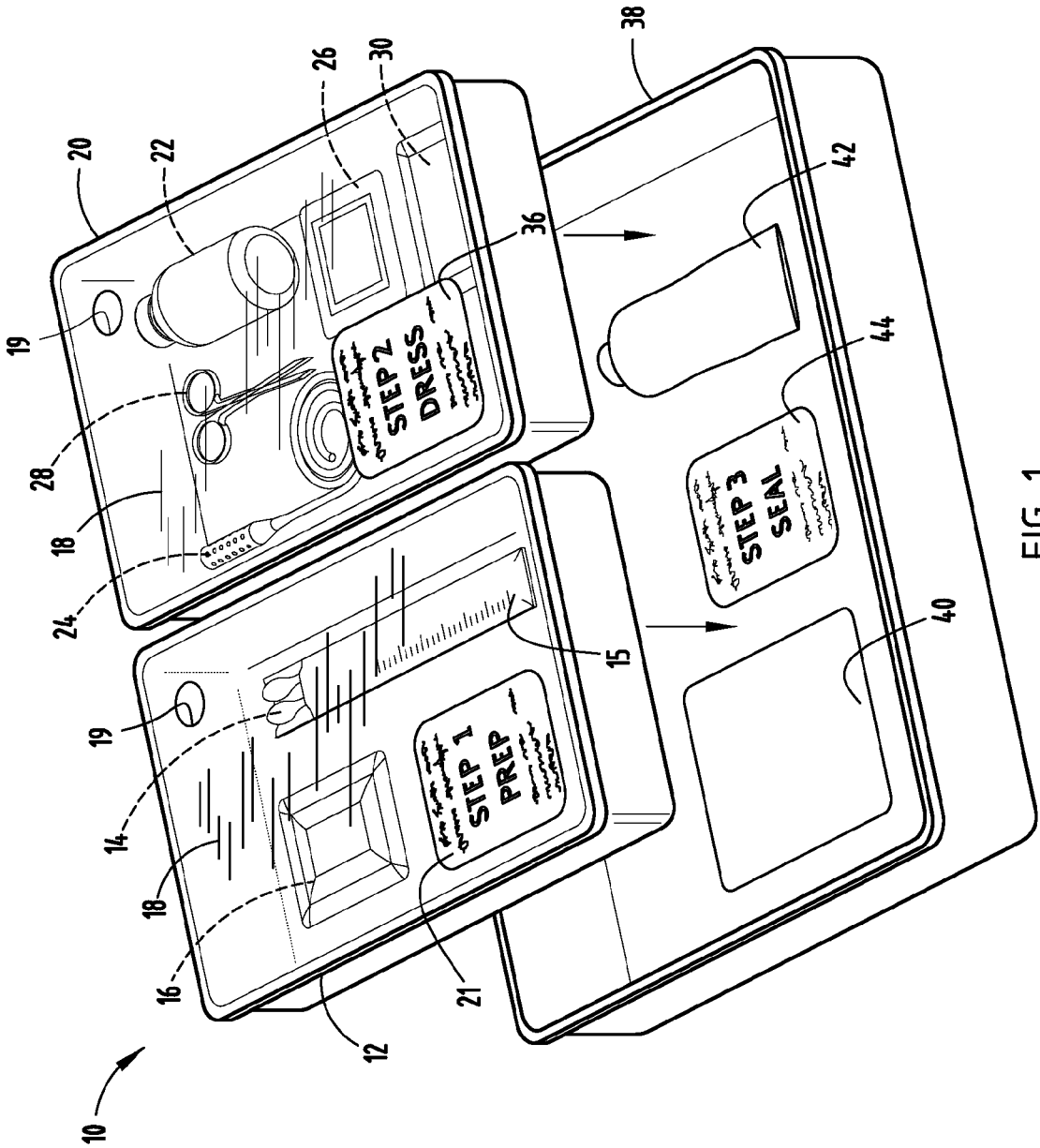
10
12
14
15
16
18
19
20
21
22
24
26
28
30
36
38
40
42
44
STEP 1
PREP
STEP 2
DRESS
STEP 3
SEAL

FIG. 1