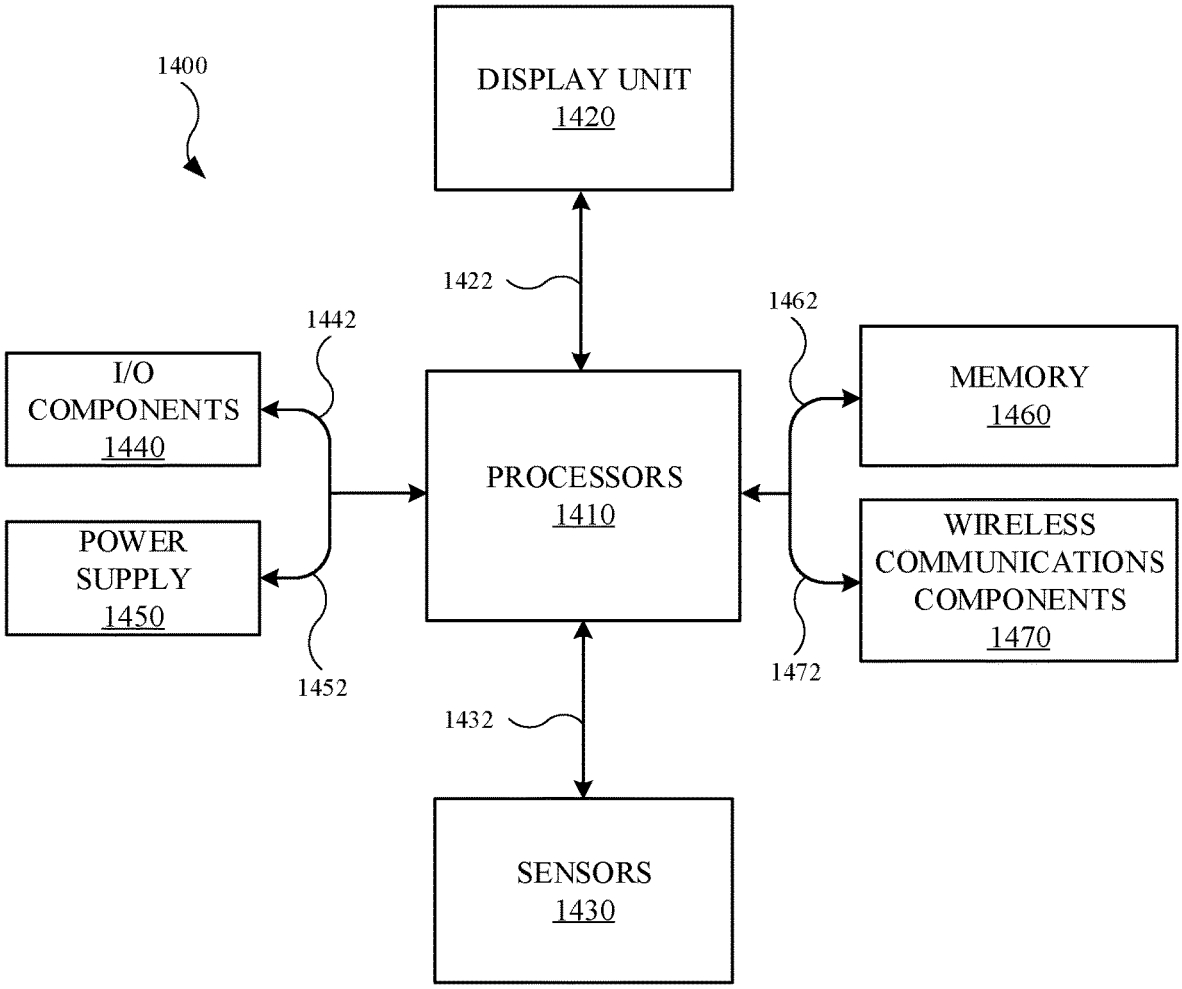
1400
DISPLAY UNIT
1420
1422
1442
1462
I/O
COMPONENTS
1440
MEMORY
1460
PROCESSORS
1410
POWER
SUPPLY
1450
WIRELESS
COMMUNICATIONS
COMPONENTS
1470
1452
1472
1432
SENSORS
1430

FIG. 21