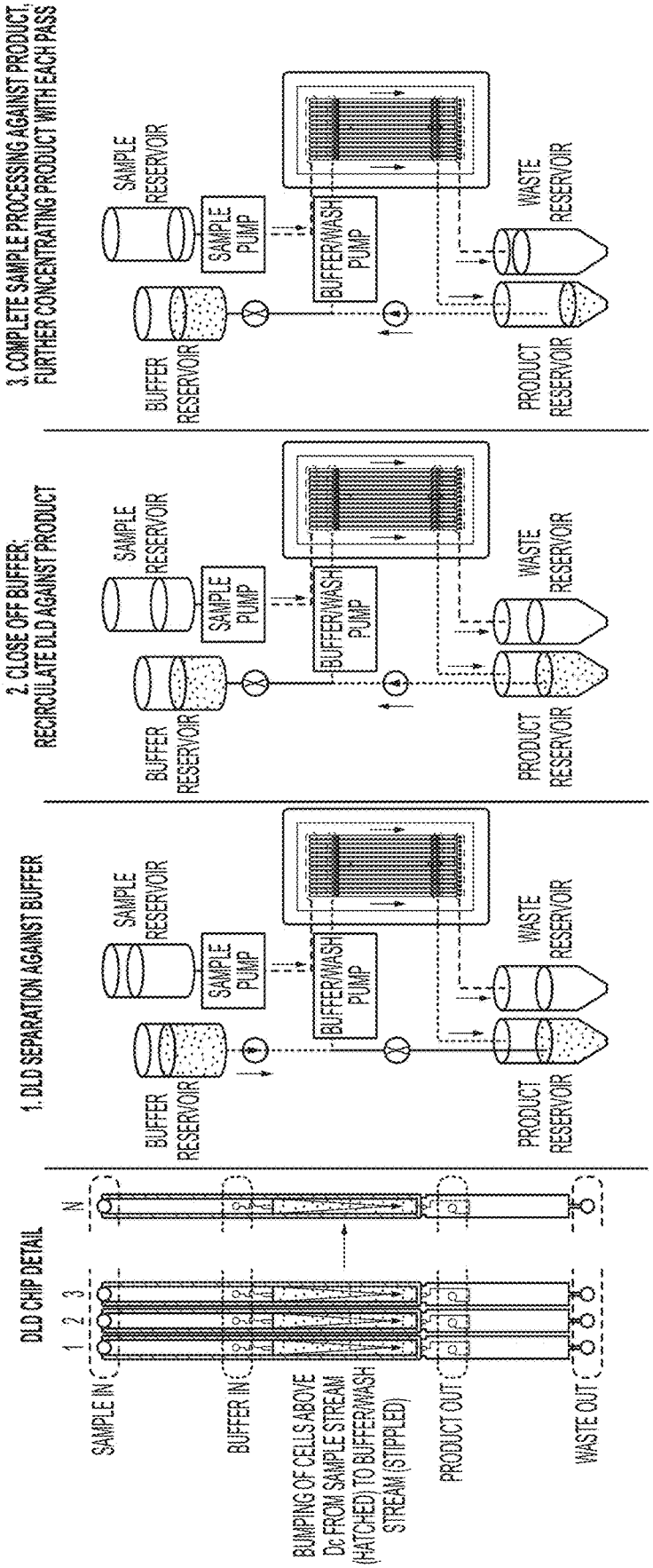
DLD CHIP DETAIL
1 2 3
N
SAMPLE IN
BUFFER IN
BUMPING OF CELLS ABOVE Dc FROM SAMPLE STREAM (HATCHED) TO BUFFER/WASH STREAM (STIPPLED)
PRODUCT OUT
WASTE OUT
1. DLD SEPARATION AGAINST BUFFER
2. CLOSE OFF BUFFER; RECIRCULATE DLD AGAINST PRODUCT
3. COMPLETE SAMPLE PROCESSING AGAINST PRODUCT; FURTHER CONCENTRATING PRODUCT WITH EACH PASS
SAMPLE RESERVOIR
SAMPLE PUMP
BUFFER/WASH PUMP
BUFFER RESERVOIR
PRODUCT RESERVOIR
WASTE RESERVOIR

FIG. 3