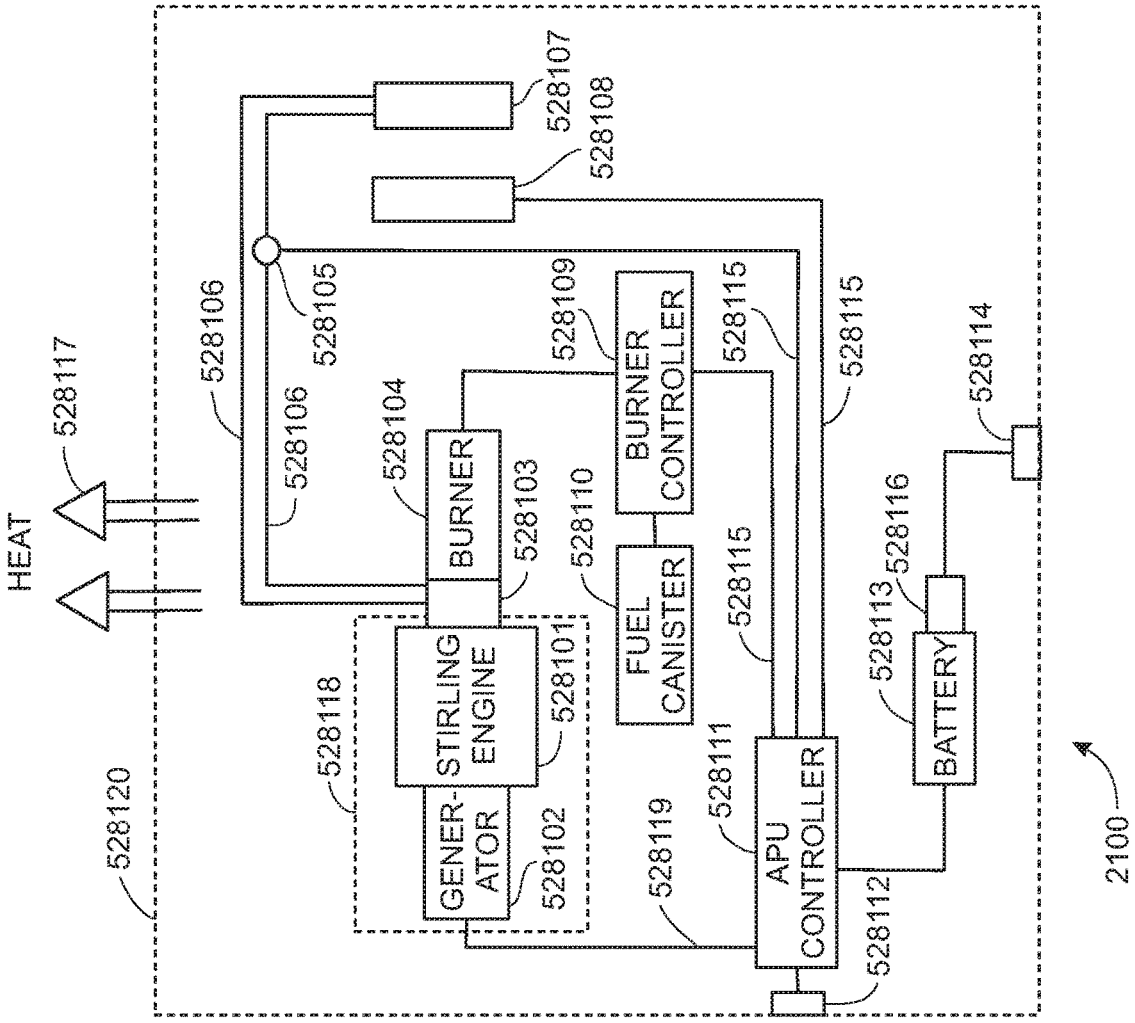
HEAT
528117
528120
528118
GENER-ATOR
528102
STIRLING ENGINE
528101
528106
528106
528104
BURNER
528103
528105
528107
528108
528109
BURNER CONTROLLER
528110
FUEL CANISTER
528115
528115
528115
528111
APU CONTROLLER
528112
528119
528113
BATTERY
528116
528114
2100

FIG. 89B