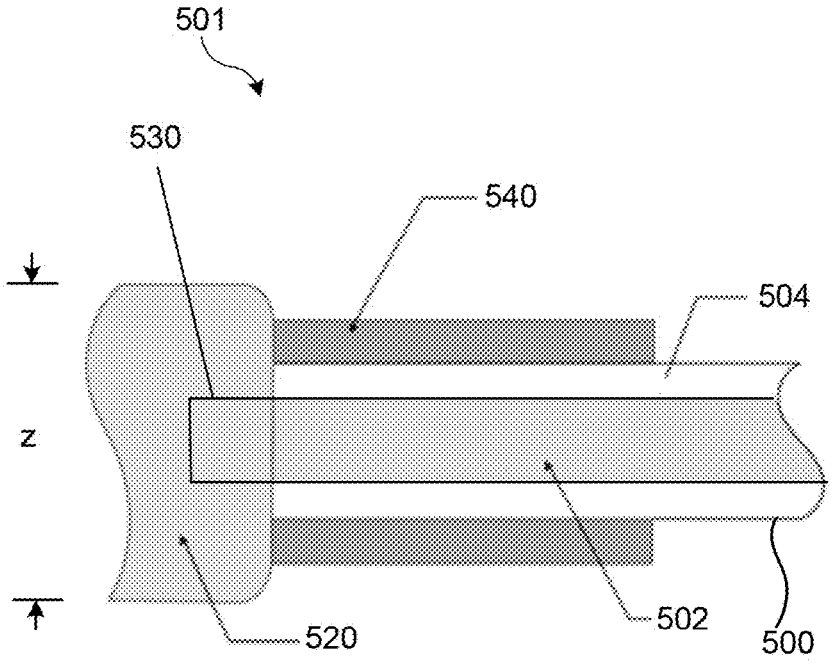

FIG. 5

(prior art)