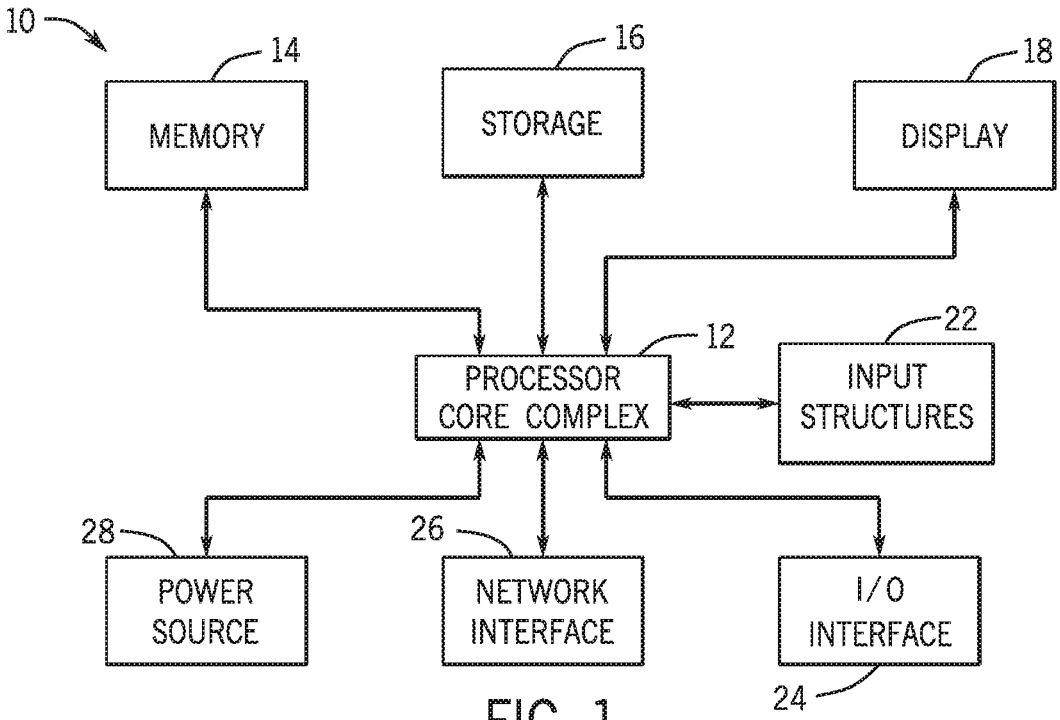
10
14
MEMORY
16
STORAGE
18
DISPLAY
12
PROCESSOR
CORE COMPLEX
22
INPUT
STRUCTURES
28
POWER
SOURCE
26
NETWORK
INTERFACE
I/O
INTERFACE
24

FIG. 1

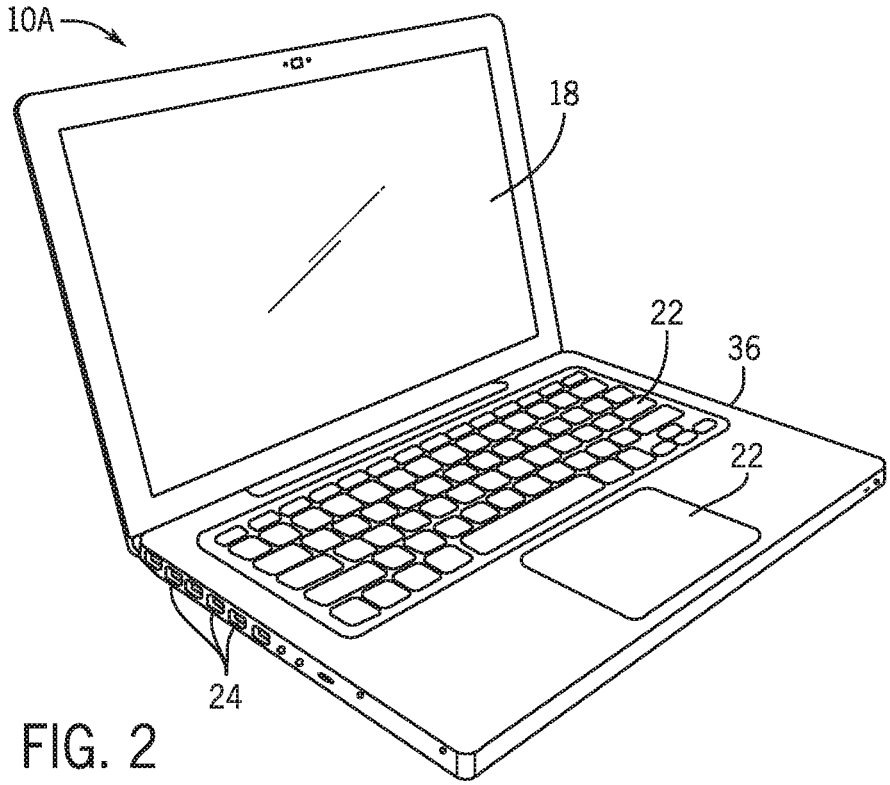
10A
18
22
36
22
24

FIG. 2