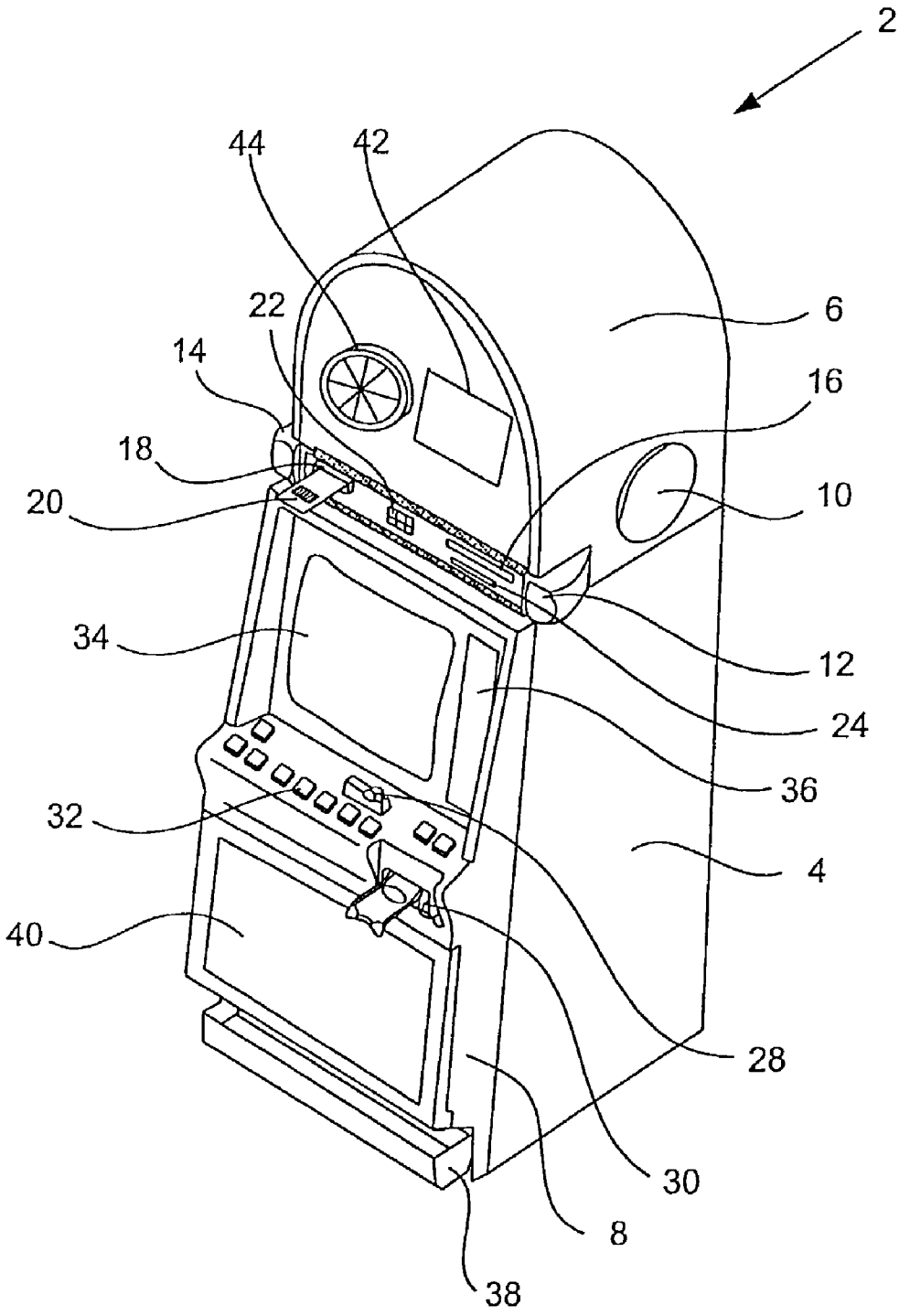

Figure 9