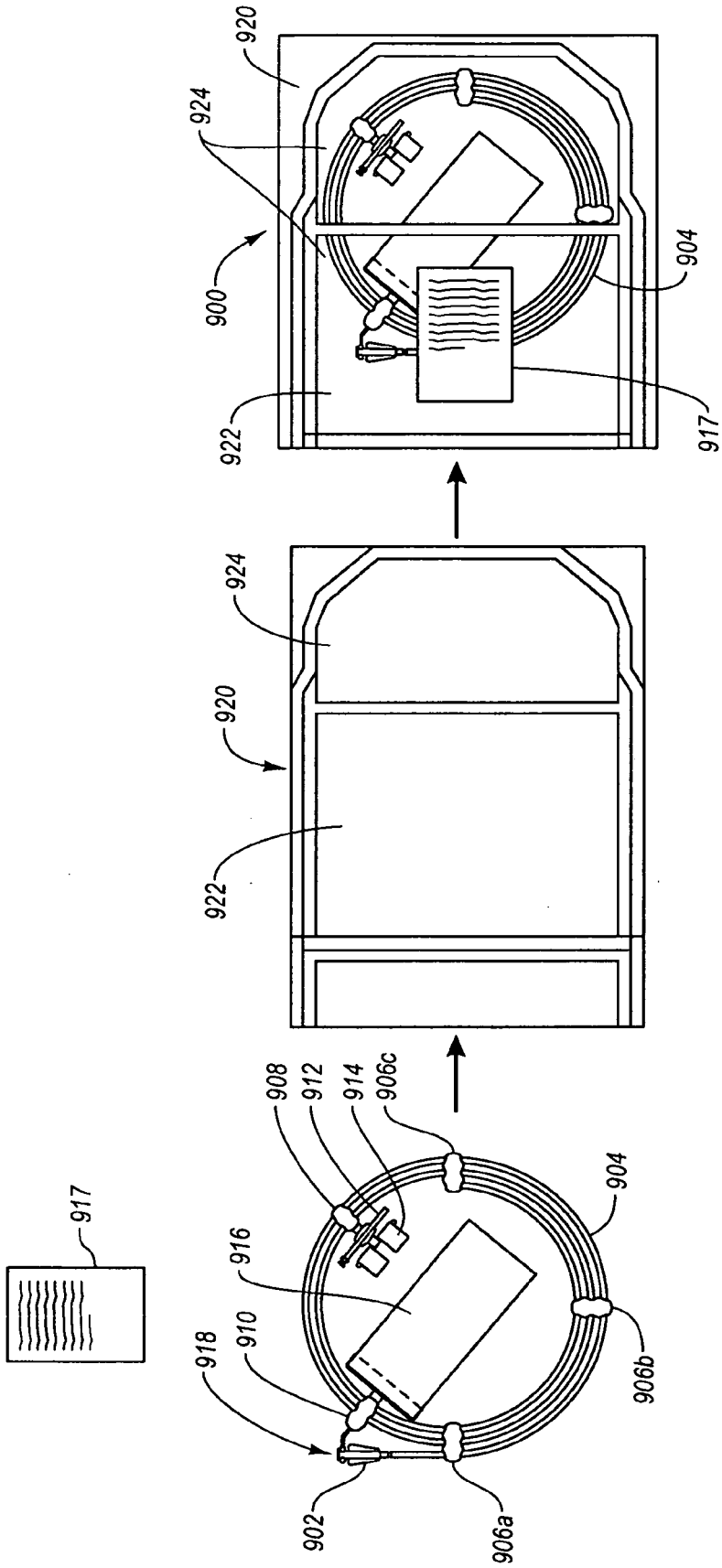
920
924
900
922
904
917
924
920
922
917
908
912
914
906c
916
910
918
902
906a
906b
904

Fig. 12