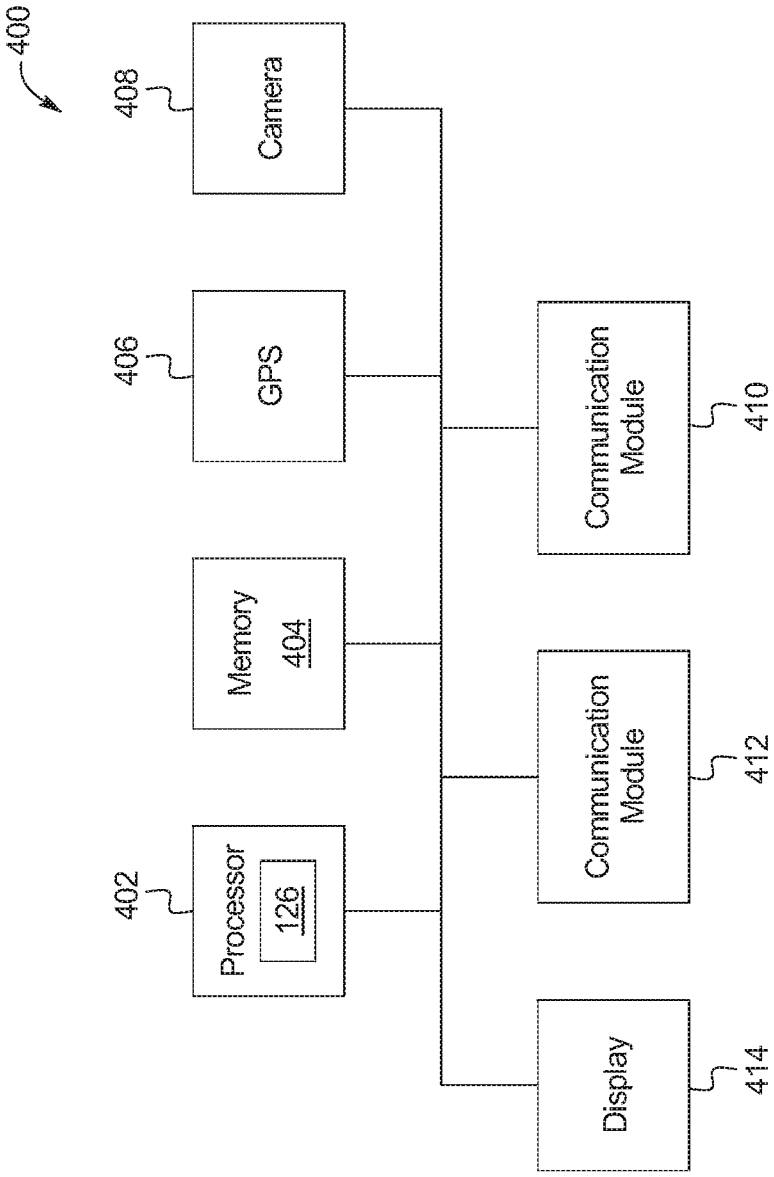
400
408
Camera
406
GPS
Memory
404
402
Processor
126
Communication
Module
410
Communication
Module
412
Display
414

FIG. 4