US 20200313111A1

(19) United States

(12) Patent Application Publication

Kim et al.

(10) Pub. No.: US 2020/0313111 A1

(43) Pub. Date: Oct. 1, 2020

(54) **ELECTRONIC DEVICES WITH FLEXIBLE DISPLAY COVER LAYERS**

(71) Applicant: **Apple Inc.**, Cupertino, CA (US)

(72) Inventors: **Hoon Sik Kim**, San Jose, CA (US); **Terry C. Lam**, Mountain View, CA (US); **Chang-Chia Huang**, Cupertino, CA (US); **Paul S. Drzaic**, Morgan Hill, CA (US); **Yasmin F. Afsar**, Princeton, NJ (US); **Young Cheol Yang**, Sunnyvale, CA (US); **Leiming Wang**, Foster City, CA (US)

(21) Appl. No.: **16/774,948**

(22) Filed: **Jan. 28, 2020**

Related U.S. Application Data

(60) Provisional application No. 62/824,168, filed on Mar. 26, 2019.

Publication Classification

(51) **Int. Cl.**

H01L 51/52	(2006.01)
H01L 51/00	(2006.01)
H01L 51/56	(2006.01)
H05K 5/00	(2006.01)
H05K 7/20	(2006.01)

(52) **U.S. Cl.**

CPC ***H01L 51/529*** (2013.01); ***H01L 51/5246*** (2013.01); ***H01L 51/0097*** (2013.01); *H01L 27/323* (2013.01); ***H01L 51/56*** (2013.01); ***H05K 5/0017*** (2013.01); ***H05K 7/20954*** (2013.01); ***H01L 51/5253*** (2013.01)

(57) **ABSTRACT**
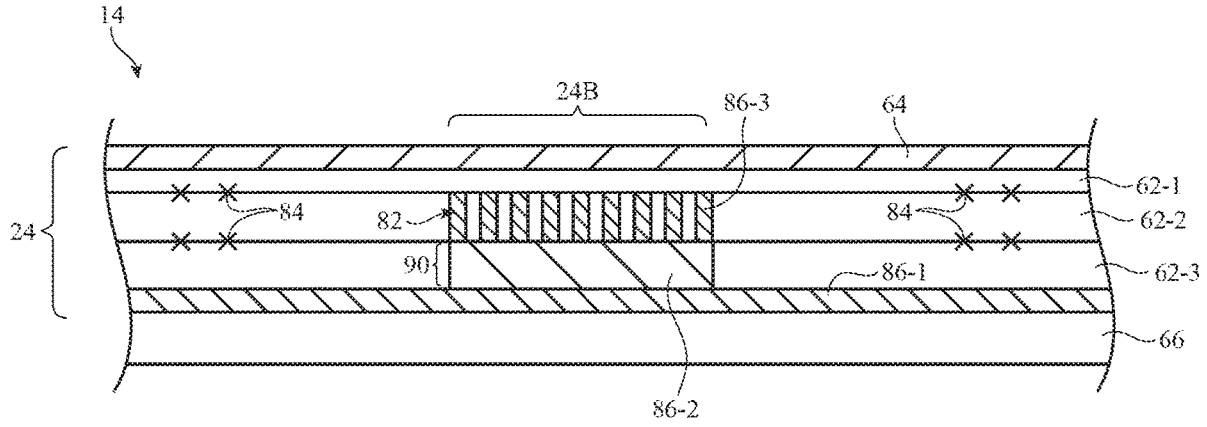
An electronic device may have a hinge that allows the device to be flexed about a bend axis. A display may span the bend axis. To facilitate bending about the bend axis without damage, the display may include a display cover layer with a flexible portion. The flexible portion of the display cover layer may be interposed between first and second rigid portions of the display cover layer. The display cover layer may also include a layer with self-healing properties. The layer of self-healing material may be formed across the entire display cover layer or may be formed only in the flexible region of the display cover layer. The display cover layer may include a layer of elastomer in the flexible region of the display cover layer for increased flexibility. Self-healing may be initiated or expedited by externally applied heat, light, electric current, or other type of external stimulus.