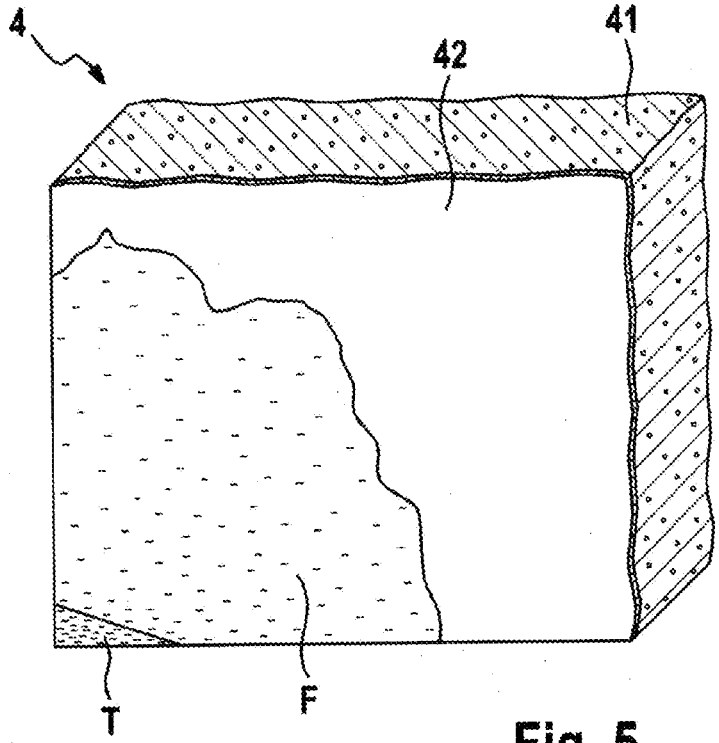
4
41
42
T
F

Fig. 5

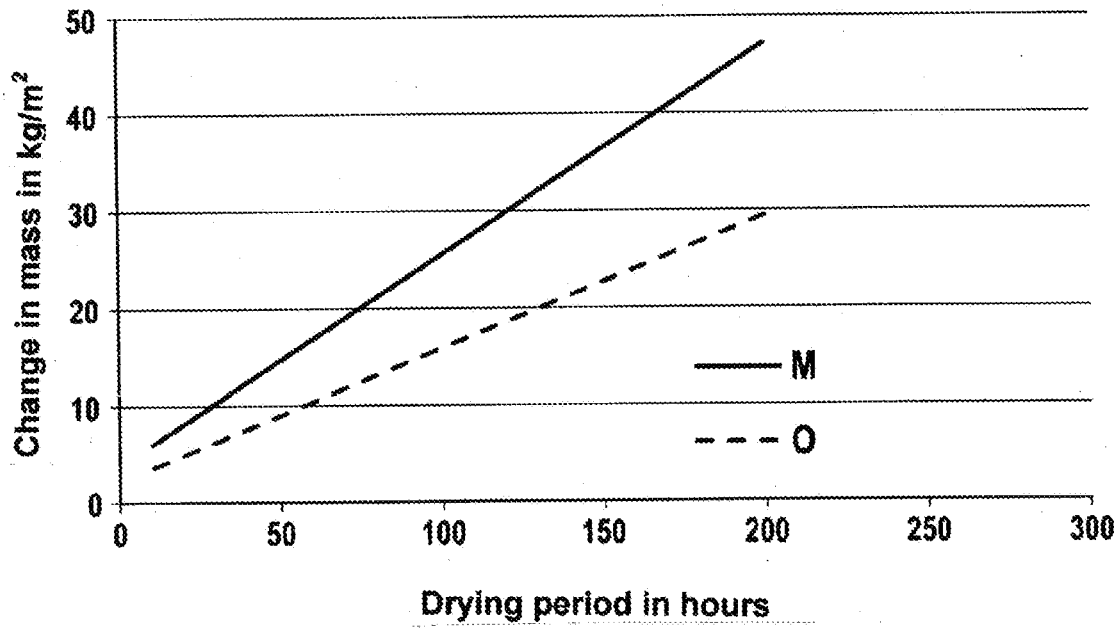
Change in mass in kg/m²
50
40
30
20
10
0
0
50
100
150
200
250
300
Drying period in hours
M
O

Fig. 6