FIG. 4

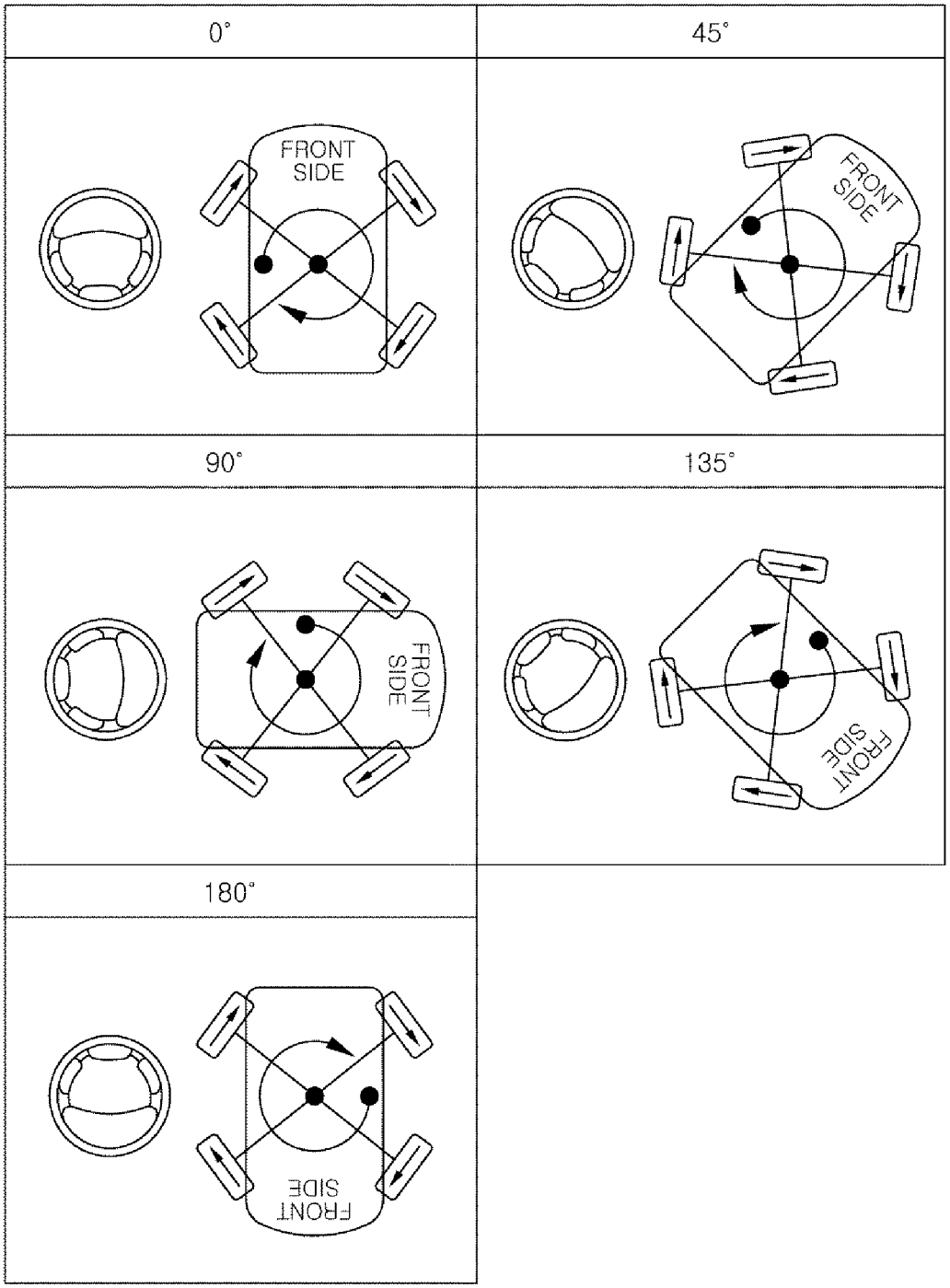
0°
FRONT SIDE
45°
FRONT SIDE
90°
FRONT SIDE
135°
FRONT SIDE
180°
FRONT SIDE