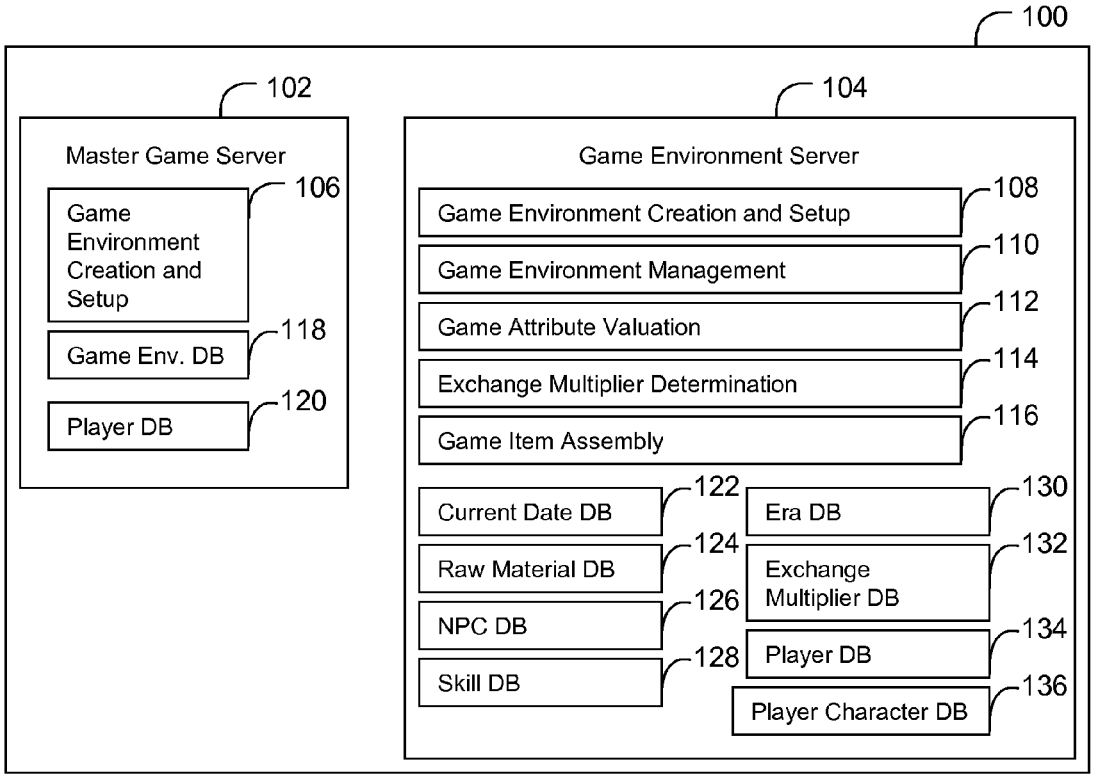
100
102
Master Game Server
106
Game Environment Creation and Setup
118
Game Env. DB
120
Player DB
104
Game Environment Server
108
Game Environment Creation and Setup
110
Game Environment Management
112
Game Attribute Valuation
114
Exchange Multiplier Determination
116
Game Item Assembly
122
Current Date DB
124
Raw Material DB
126
NPC DB
128
Skill DB
130
Era DB
132
Exchange Multiplier DB
134
Player DB
136
Player Character DB

Fig. 1