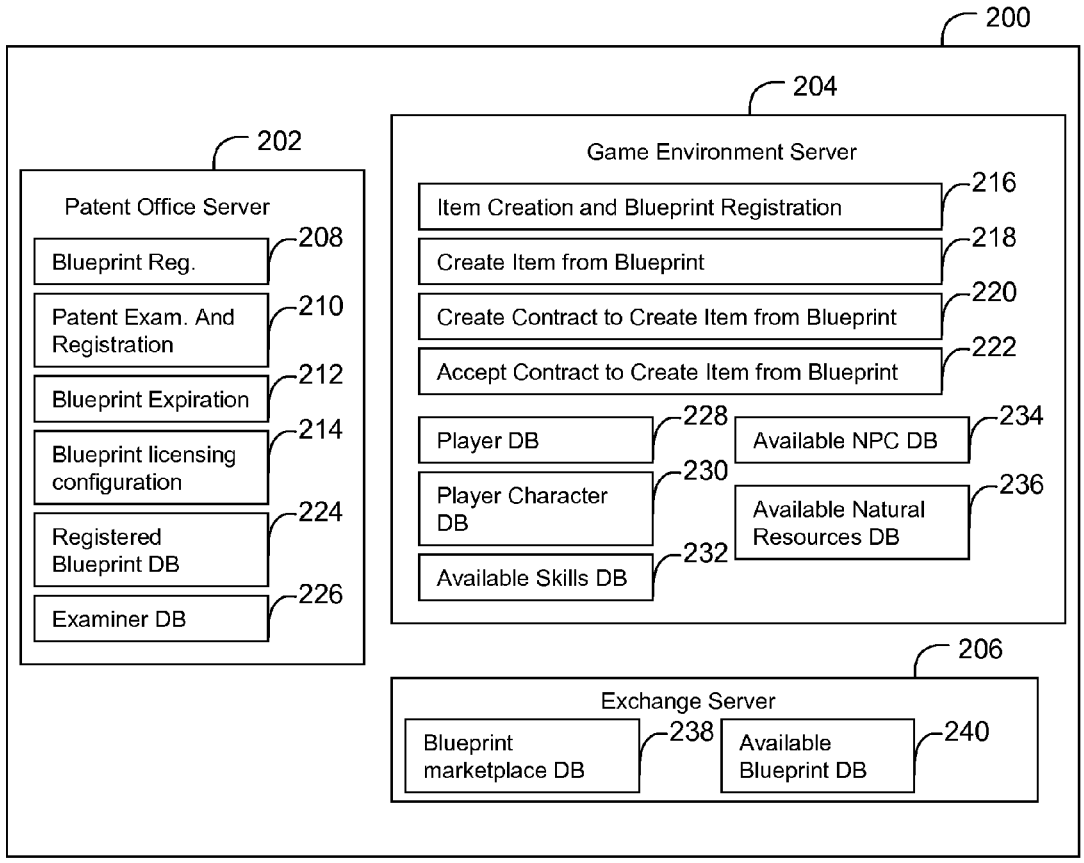
200
202
Patent Office Server
Blueprint Reg.
208
Patent Exam. And Registration
210
Blueprint Expiration
212
Blueprint licensing configuration
214
Registered Blueprint DB
224
Examiner DB
226
204
Game Environment Server
Item Creation and Blueprint Registration
216
Create Item from Blueprint
218
Create Contract to Create Item from Blueprint
220
Accept Contract to Create Item from Blueprint
222
Player DB
228
Available NPC DB
234
Player Character DB
230
Available Natural Resources DB
236
Available Skills DB
232
206
Exchange Server
Blueprint marketplace DB
238
Available Blueprint DB
240

Fig. 2

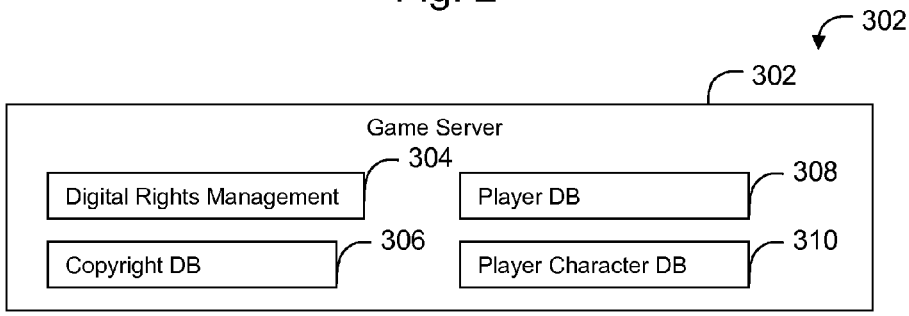
302
302
Game Server
Digital Rights Management
304
Player DB
308
Copyright DB
306
Player Character DB
310

Fig. 3