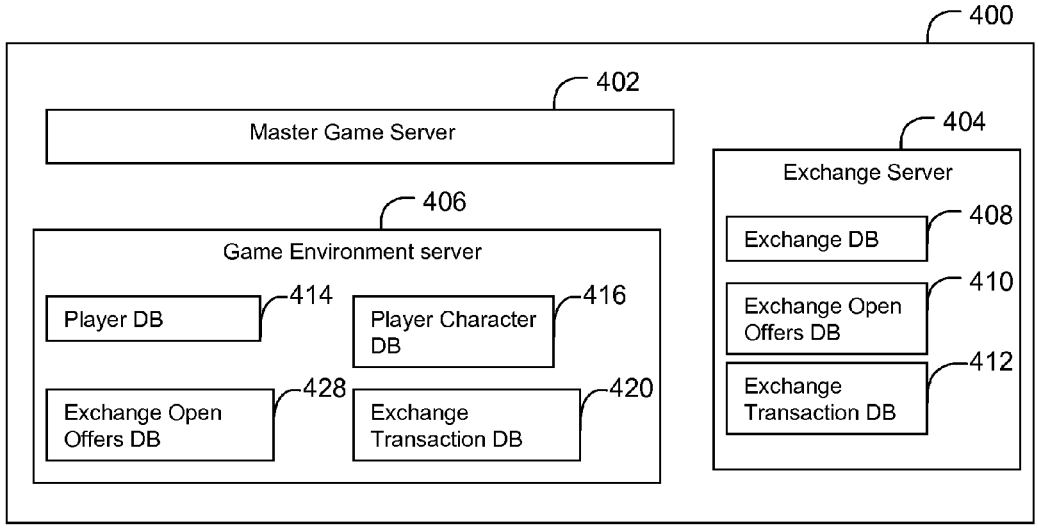
400
402
Master Game Server
404
Exchange Server
406
Game Environment server
408
Exchange DB
414
Player DB
416
Player Character DB
410
Exchange Open Offers DB
412
Exchange Transaction DB
428
Exchange Open Offers DB
420
Exchange Transaction DB

Fig. 4

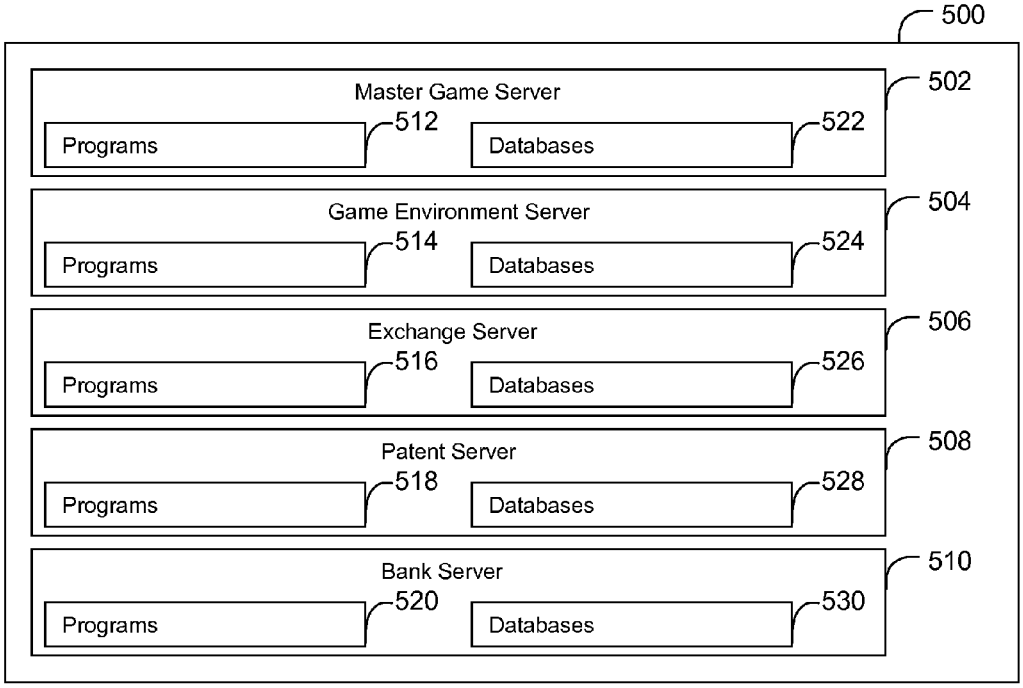
500
Master Game Server
502
Programs
512
Databases
522
Game Environment Server
504
Programs
514
Databases
524
Exchange Server
506
Programs
516
Databases
526
Patent Server
508
Programs
518
Databases
528
Bank Server
510
Programs
520
Databases
530

Fig. 5