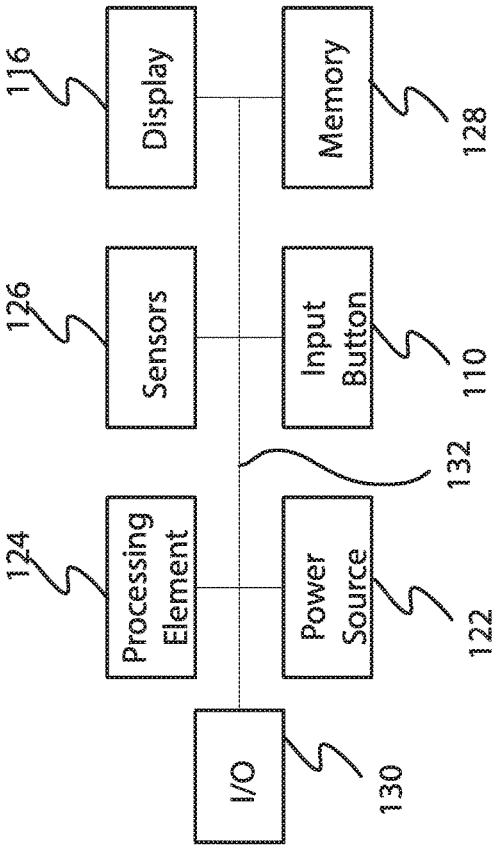
Display
116
Memory
128
Sensors
126
Input Button
110
Processing Element
124
Power Source
122
132
I/O
130

FIG. 2

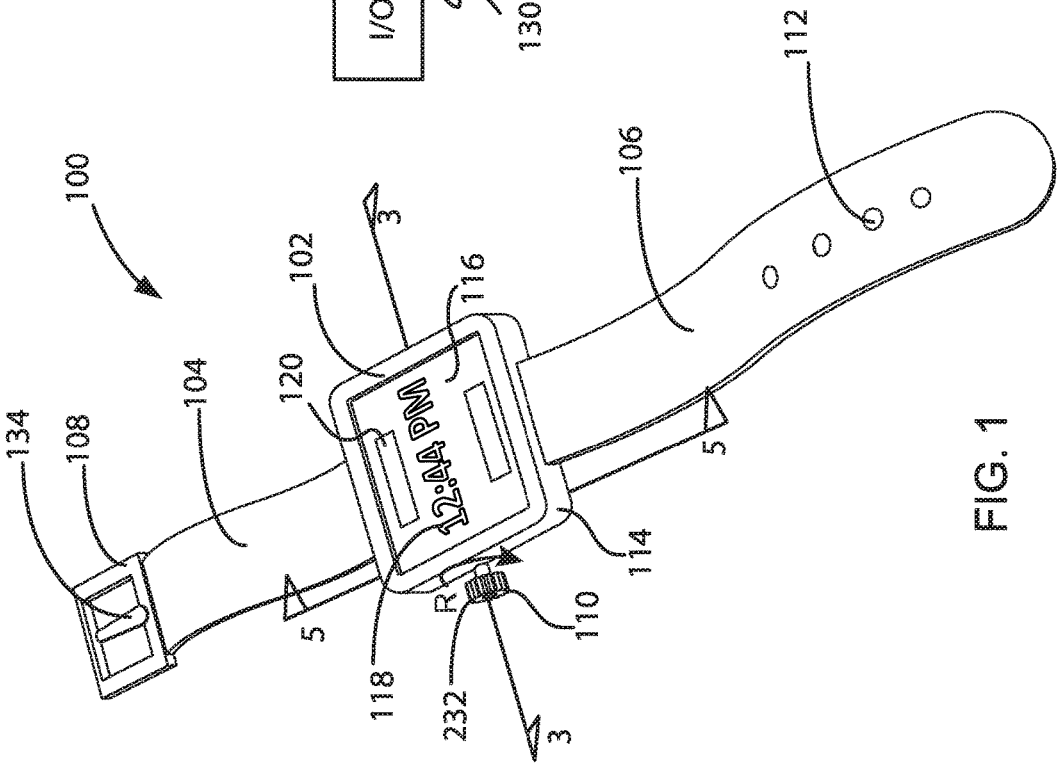
100
134
108
104
120
102
116
3
106
112
12:44 PM
5
118
R
232
110
114
3
5

FIG. 1