FIG. 4

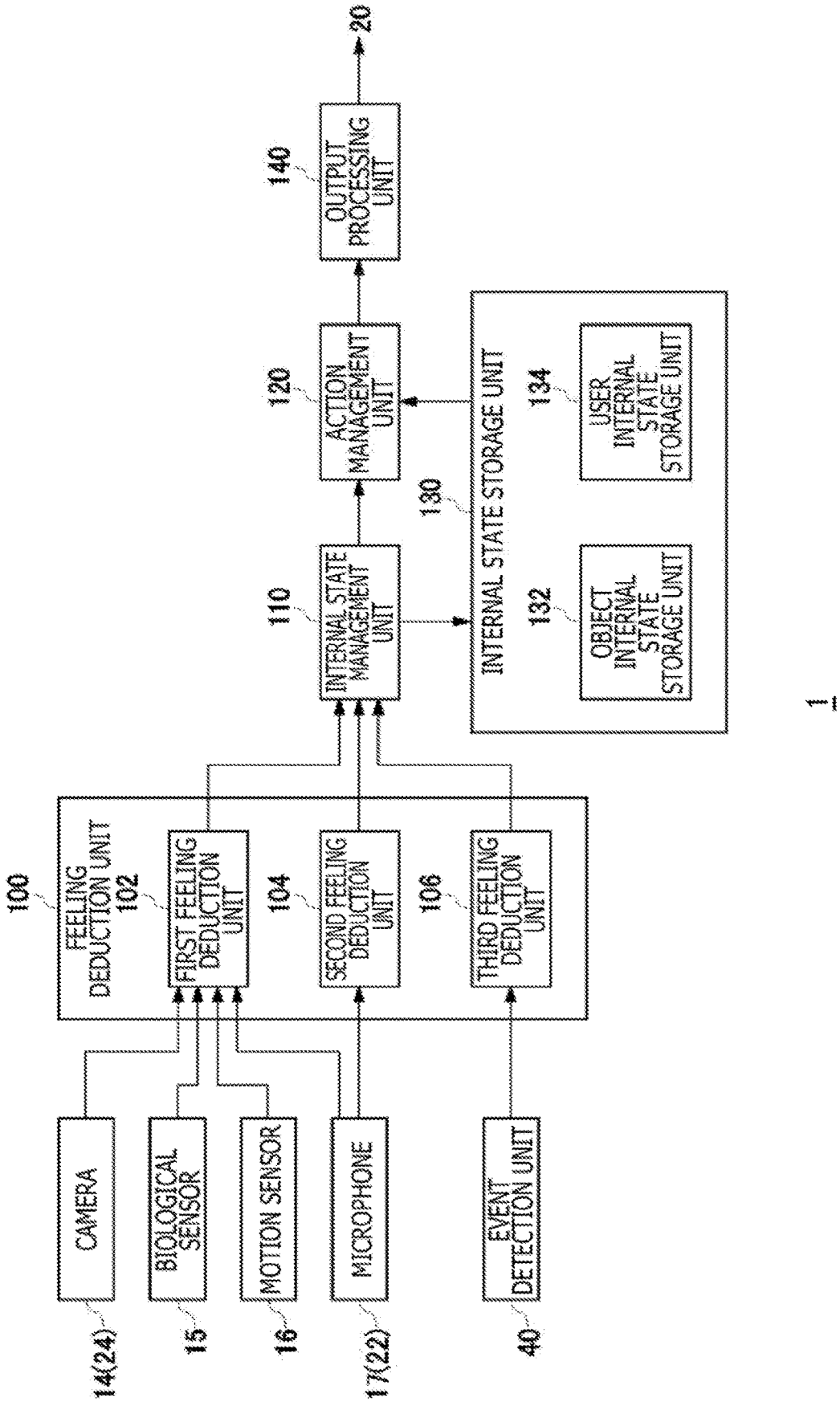
CAMERA
14(24)
BIOLOGICAL SENSOR
15
MOTION SENSOR
16
MICROPHONE
17(22)
EVENT DETECTION UNIT
40
FEELING DEDUCTION UNIT
100
FIRST FEELING DEDUCTION UNIT
102
SECOND FEELING DEDUCTION UNIT
104
THIRD FEELING DEDUCTION UNIT
106
INTERNAL STATE MANAGEMENT UNIT
110
ACTION MANAGEMENT UNIT
120
OUTPUT PROCESSING UNIT
140
20
INTERNAL STATE STORAGE UNIT
130
OBJECT INTERNAL STATE STORAGE UNIT
132
USER INTERNAL STATE STORAGE UNIT
134
1