US 20210323420A1

(19) United States

(12) Patent Application Publication

(10) Pub. No.: US 2021/0323420 A1

(43) Pub. Date: Oct. 21, 2021

Lu

(54) **VEHICLE TO VEHICLE WIRELESS ENERGY TRANSFER**

(71) Applicant: **TOYOTA MOTOR NORTH AMERICA, INC.**, Plano, TX (US)

(72) Inventor: **Norman Lu**, Fairview, TX (US)

(21) Appl. No.: **16/854,846**

(22) Filed: **Apr. 21, 2020**

Publication Classification

(51) **Int. Cl.**

B60L 53/12	(2006.01)
H04W 4/46	(2006.01)
B60L 53/30	(2006.01)
H02J 7/00	(2006.01)

(52) **U.S. Cl.**

CPC ***B60L 53/12*** (2019.02); ***H02J 7/00032*** (2020.01); ***B60L 53/305*** (2019.02); ***H04W 4/46*** (2018.02)

(57) **ABSTRACT**

An example operation includes one or more of establishing a first wireless connection between a first transport in motion and a second transport in motion, receiving an energy transfer request over the first wireless connection from the first transport to the second transport, establishing a second wireless connection from an energy interface on the second transport to an energy interface on the first transport, and transferring an amount of energy via the second wireless connection based on the request.
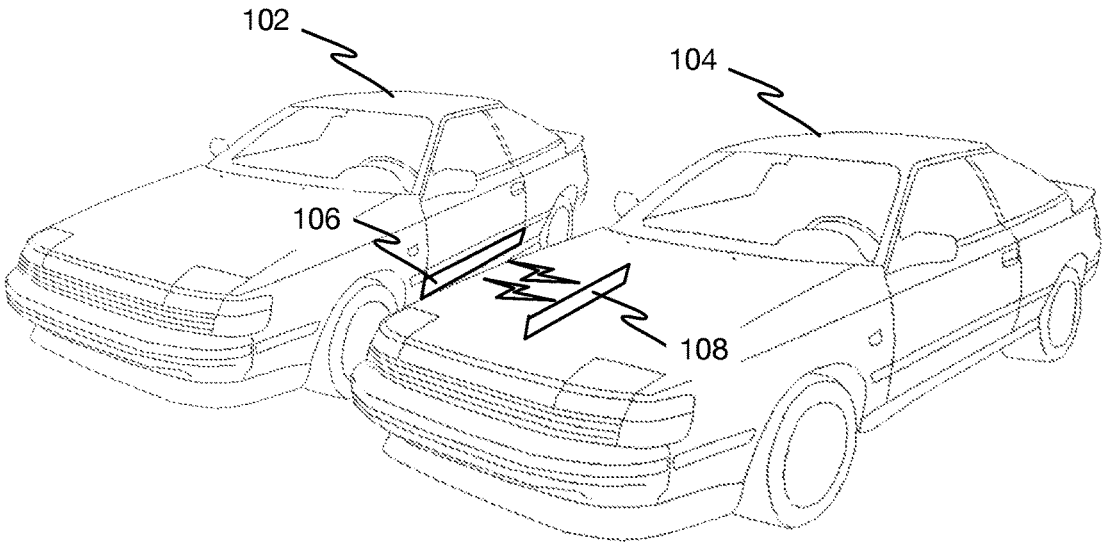
100