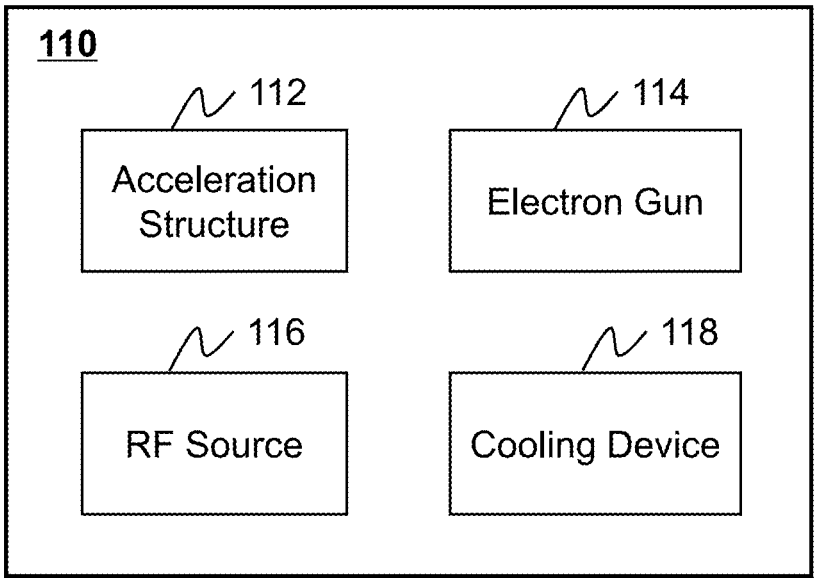
110
112
Acceleration Structure
114
Electron Gun
116
RF Source
118
Cooling Device

FIG. 1B