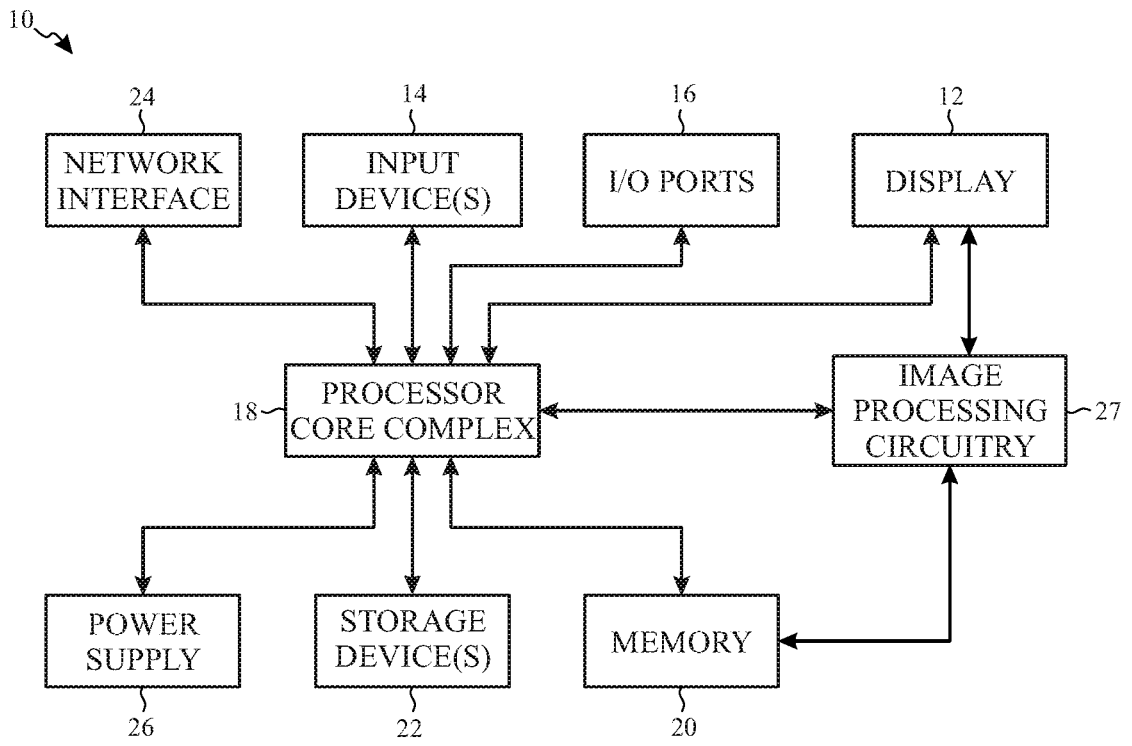
10
24
NETWORK INTERFACE
14
INPUT DEVICE(S)
16
I/O PORTS
12
DISPLAY
18
PROCESSOR CORE COMPLEX
IMAGE PROCESSING CIRCUITRY
27
POWER SUPPLY
26
STORAGE DEVICE(S)
22
MEMORY
20

FIG. 1