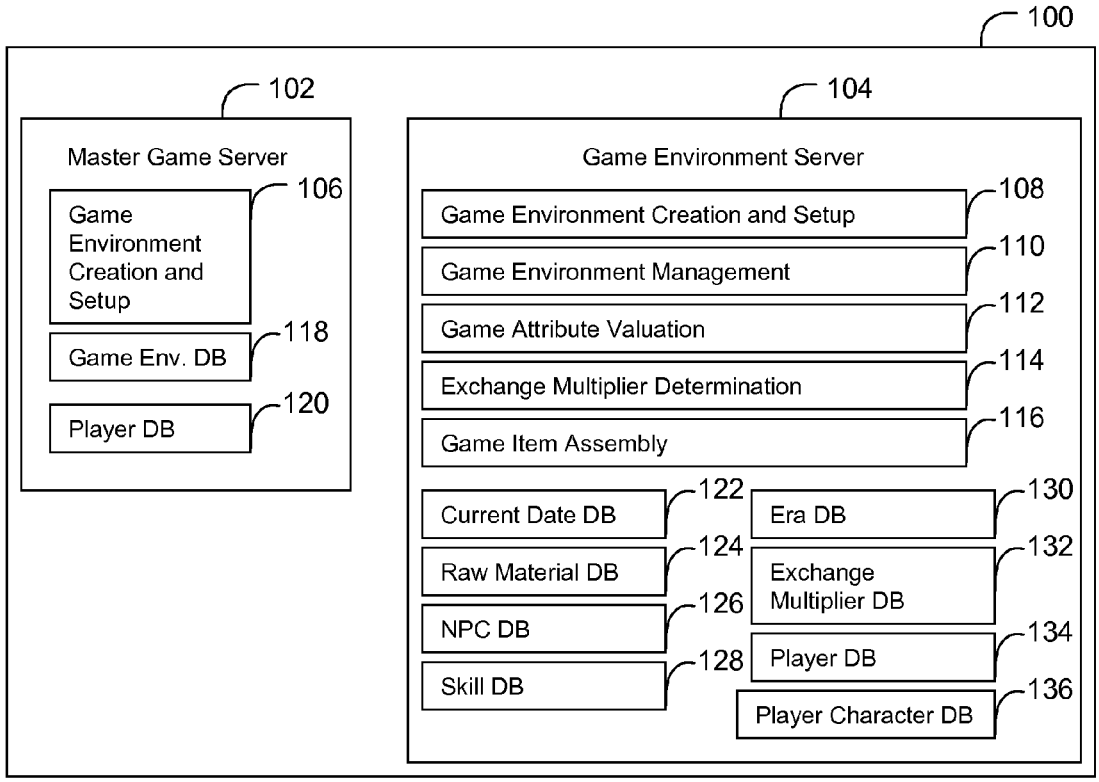
100
102
Master Game Server
Game Environment Creation and Setup
106
Game Env. DB
118
Player DB
120
104
Game Environment Server
Game Environment Creation and Setup
108
Game Environment Management
110
Game Attribute Valuation
112
Exchange Multiplier Determination
114
Game Item Assembly
116
Current Date DB
122
Raw Material DB
124
NPC DB
126
Skill DB
128
Era DB
130
Exchange Multiplier DB
132
Player DB
134
Player Character DB
136

Fig. 1