US 20210191425A1

(19) United States

(12) Patent Application Publication

Garhart

(10) Pub. No.: US 2021/0191425 A1

(43) Pub. Date: Jun. 24, 2021

(54) **INTEGRATION OF REAL TIME METADATA IN THE EVALUATION OF LANDING ZONES**

(71) Applicant: **Lockheed Martin Corporation**, Bethesda, MD (US)

(72) Inventor: **Jonathan K. Garhart**, Seymour, CT (US)

(21) Appl. No.: **16/718,769**

(22) Filed: **Dec. 18, 2019**

Publication Classification

(51) **Int. Cl.**

G05D 1/04	(2006.01)
H04W 4/021	(2006.01)
H04W 4/42	(2006.01)
B64C 39/02	(2006.01)

(52) **U.S. Cl.**

CPC ***G05D 1/042*** (2013.01); ***H04W 4/021*** (2013.01); *B64C 2201/141* (2013.01); ***B64C 39/024*** (2013.01); ***H04W 4/42*** (2018.02)

(57) **ABSTRACT**
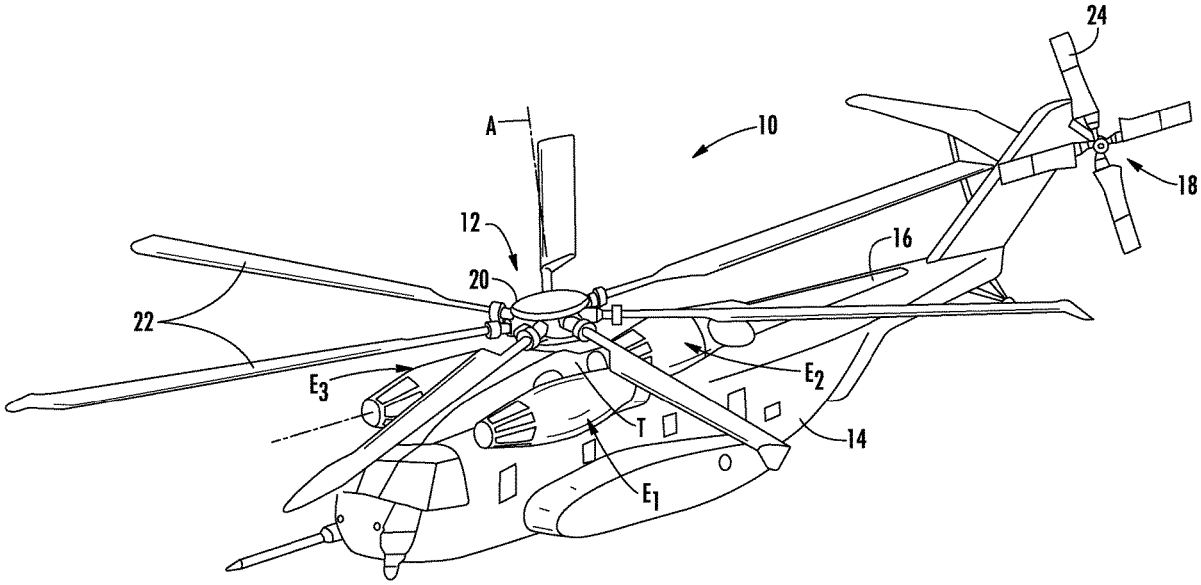
A technique relates to evaluating autonomous landing of an aircraft. An autonomous vehicle receives cellular metadata and determines whether a landing site is suitable for the autonomous vehicle based on the cellular metadata.