US 20190119126A1

(19) United States

(12) Patent Application Publication

Yuh

(10) Pub. No.: US 2019/0119126 A1

(43) Pub. Date: Apr. 25, 2019

(54) **SYSTEM AND METHOD FOR SORBTION DISTILLATION**

(71) Applicant: **Howard Y. Yuh**, Yardley, PA (US)

(72) Inventor: **Howard Y. Yuh**, Yardley, PA (US)

(21) Appl. No.: **16/164,942**

(22) Filed: **Oct. 19, 2018**

Related U.S. Application Data

(62) Division of application No. 15/637,236, filed on Jun. 29, 2017, now Pat. No. 10,150,681.

(60) Provisional application No. 62/356,126, filed on Jun. 29, 2016.

Publication Classification

(51) **Int. Cl.**

C02F 1/04	(2006.01)
B01J 20/28	(2006.01)
C02F 1/26	(2006.01)
B01J 20/283	(2006.01)
B01J 20/04	(2006.01)
B01J 20/20	(2006.01)
C02F 1/14	(2006.01)
C02F 1/12	(2006.01)
H01L 31/054	(2006.01)
H02S 40/44	(2006.01)
F24S 23/79	(2006.01)
F24S 20/20	(2006.01)
F24S 23/77	(2006.01)
B01D 1/00	(2006.01)
B01D 15/08	(2006.01)
B01D 3/04	(2006.01)
H02S 20/32	(2006.01)
H02S 20/10	(2006.01)

(52) **U.S. Cl.**

CPC ***C02F 1/048*** (2013.01); *B01D 3/146* (2013.01); ***C02F 1/265*** (2013.01); ***B01J 20/283*** (2013.01); ***B01J 20/046*** (2013.01); ***B01J 20/20*** (2013.01); ***B01J 20/28014*** (2013.01); ***C02F 1/14*** (2013.01); ***C02F 1/12*** (2013.01); ***H01L 31/0547*** (2014.12); ***H02S 40/44*** (2014.12); ***F24S 23/79*** (2018.05); ***F24S 20/20*** (2018.05); ***F24S 23/77*** (2018.05); ***B01D 1/0035*** (2013.01); ***B01D 15/08*** (2013.01); ***B01D 3/04*** (2013.01); ***H02S 20/32*** (2014.12); ***H02S 20/10*** (2014.12); ***B01J 20/28004*** (2013.01)

(57) **ABSTRACT**
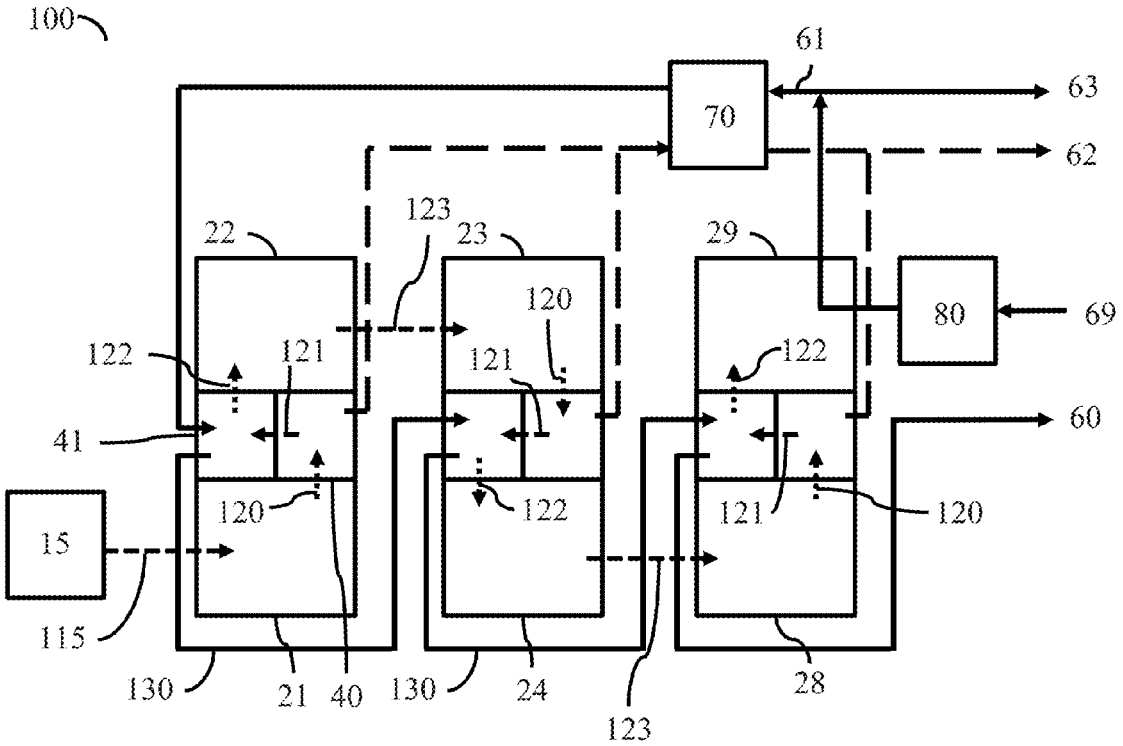
A system for distilling water is disclosed. The system comprises a heat source, and a plurality of open-cycle adsorption stages, each stage comprising a plurality of beds and an evaporator and a condenser between a first bed and a second bed, wherein each bed comprises at least two vapor valves, a plurality of hollow tubes, a plurality of channels adapted for transferring water vapor to and from at least one of the condenser or the evaporator, a thermally conductive water vapor adsorbent, and wherein each vapor valve connects a bed to either the condenser or the evaporator.