US 20220134026A1

(19) United States

(12) Patent Application Publication

NIEBUHR et al.

(10) Pub. No.: US 2022/0134026 A1

(43) Pub. Date: May 5, 2022

(54) **CONSUMPTION UNIT, INHALER AND MANUFACTURING METHOD**

(71) Applicant: **HAUNI MASCHINENBAU GMBH**, HAMBURG (DE)

(72) Inventors: **GUNNAR NIEBUHR**, HAMBURG (DE); **LENNART KOCK**, HAMBURG (DE); **THOMAS MÜLLER**, HAMBURG (DE); **BENJAMIN JUNG**, HAMBURG (DE); **VOLKMAR VOIGTLÄNDER**, HAMBURG (DE); **MARKUS SCHMIDT**, KAMEN (DE); **MATTHIAS GIESE**, TOKYO (JP); **MICHAEL KLEINE WÄCHTER**, LANKAU (DE); **MARC KESSLER**, HAMBURG (DE)

(21) Appl. No.: **17/431,971**

(22) PCT Filed: **Feb. 13, 2020**

(86) PCT No.: **PCT/EP2020/053804**

§ 371 (c)(1),
(2) Date: **Aug. 18, 2021**

(30) **Foreign Application Priority Data**

Feb. 18, 2019 (DE) 10 2019 103 989.4

Publication Classification

(51) **Int. Cl.**

A61M 11/04	(2006.01)
A24F 40/42	(2006.01)
A24F 40/10	(2006.01)
A24F 40/485	(2006.01)
A24F 7/00	(2006.01)
A24F 40/44	(2006.01)
A24F 40/70	(2006.01)
A24F 40/46	(2006.01)

(52) **U.S. Cl.**

CPC ***A61M 11/042*** (2014.02); ***A24F 40/42*** (2020.01); ***A24F 40/10*** (2020.01); ***A24F 40/485*** (2020.01); *A61M 2209/045* (2013.01); ***A24F 40/44*** (2020.01); ***A24F 40/70*** (2020.01); ***A24F 40/46*** (2020.01); ***A24F 7/00*** (2013.01)

(57) **ABSTRACT**
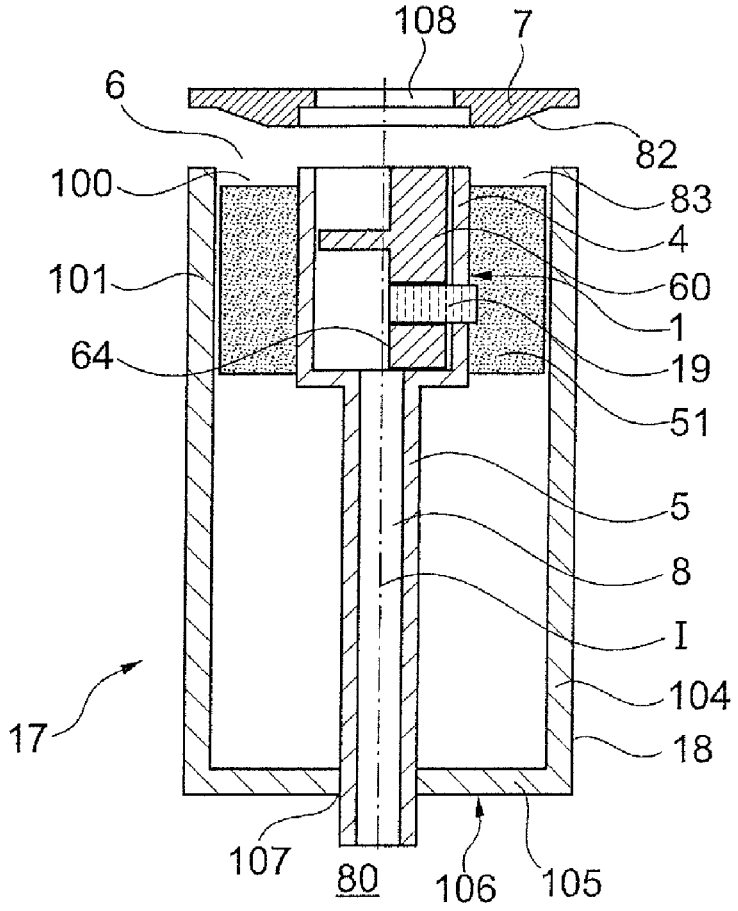
A consumption unit for an inhaler comprises a liquid reservoir, a vaporizer device arranged in the liquid reservoir, and a vent having a flow channel extending in the liquid reservoir to a flow connection of the flow channel to the environment. The liquid reservoir comprises a filling opening, which is closed by means of a first closure part.