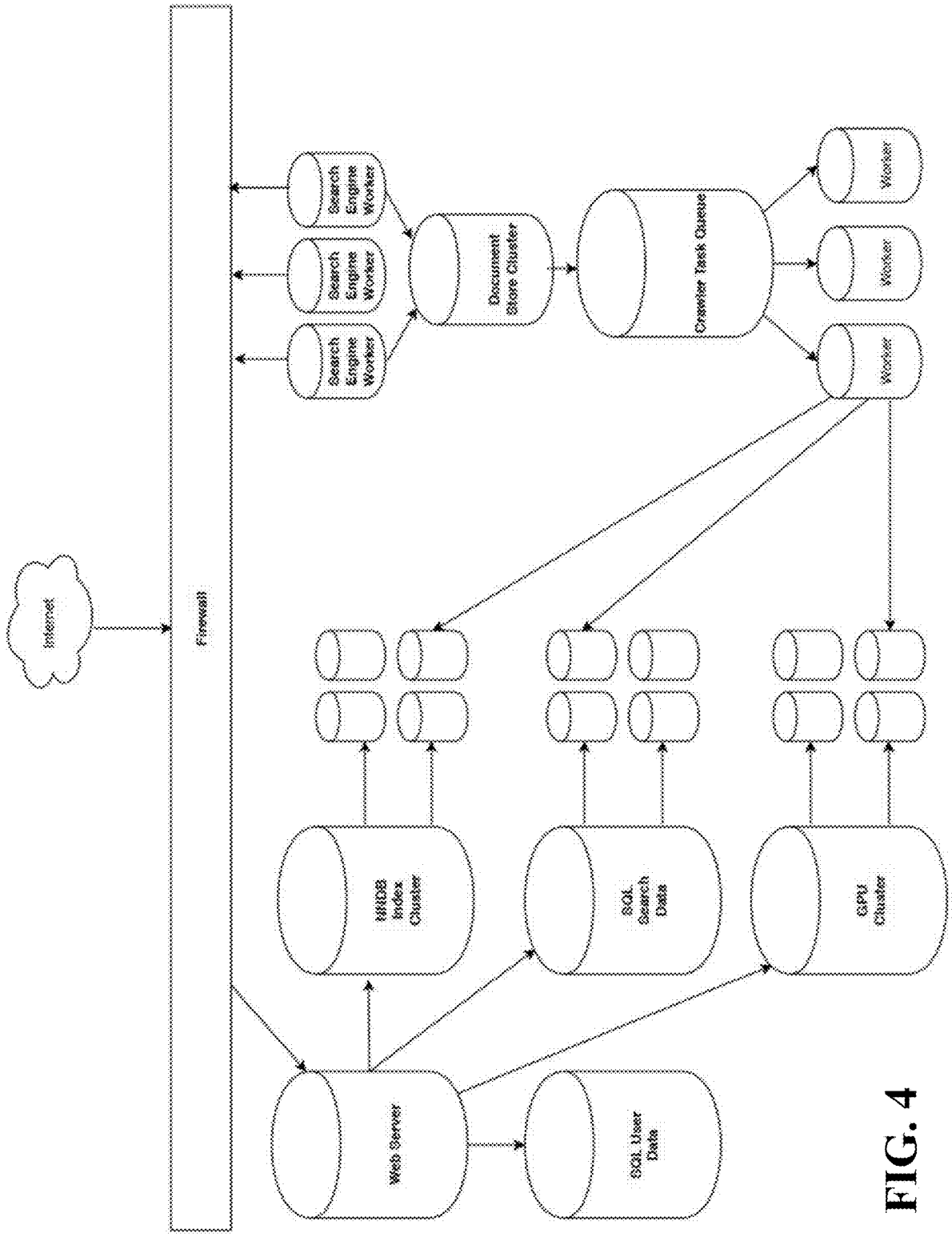
Internet
Firewall
Search Engine Worker
Search Engine Worker
Search Engine Worker
Document Store Cluster
Crawler Task Queue
Worker
Worker
Worker
MIDB Index Cluster
SQL Search DBS
GPU Cluster
Web Server
SQL User Data

FIG. 4