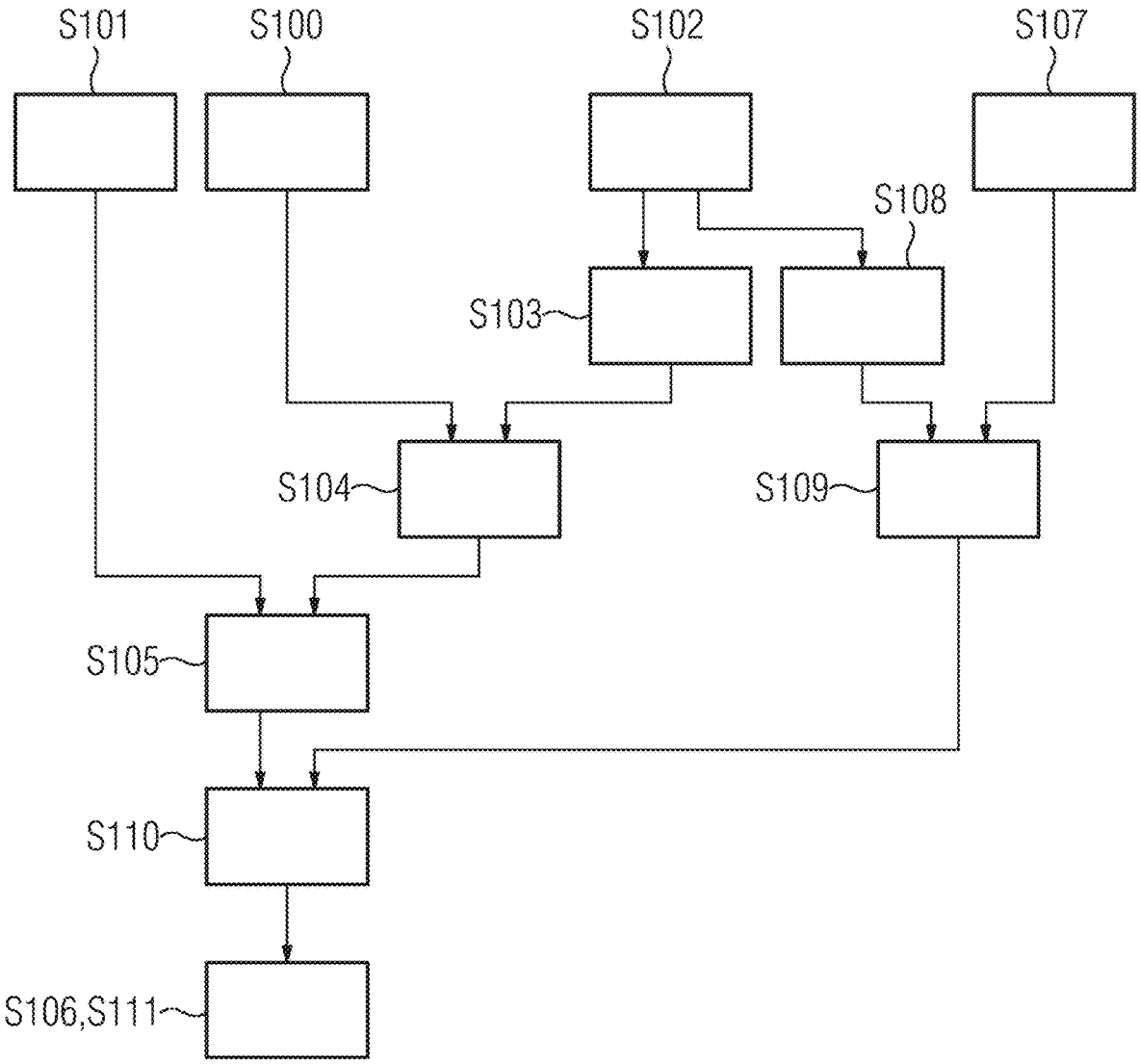FIG 2