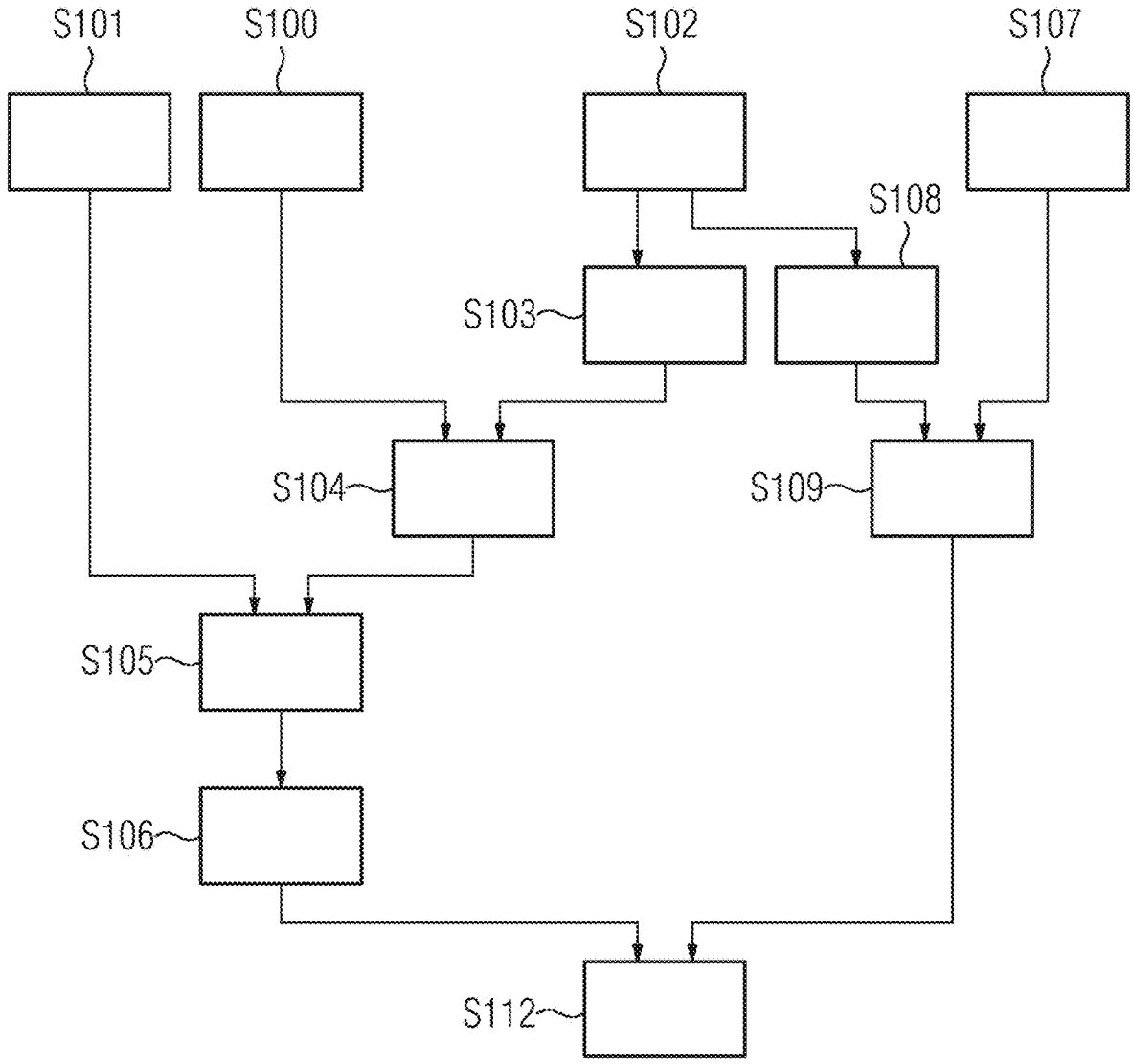FIG 3