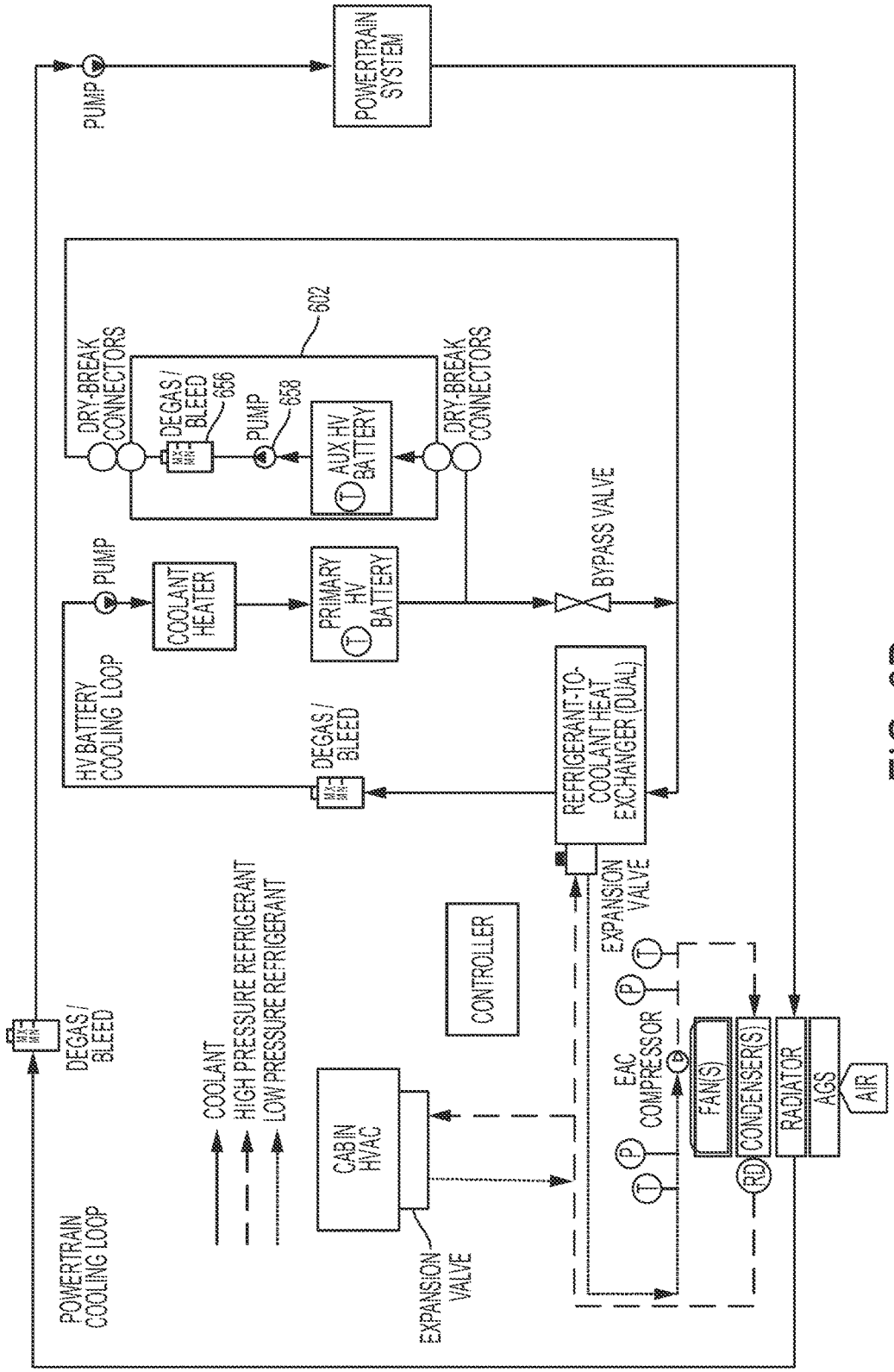
PUMP
POWERTRAIN SYSTEM
602
DRY-BREAK CONNECTORS
DEGAS / BLEED
656
PUMP
658
AUX HV BATTERY
DRY-BREAK CONNECTORS
PUMP
COOLANT HEATER
PRIMARY HV BATTERY
BYPASS VALVE
HV BATTERY COOLING LOOP
DEGAS / BLEED
REFRIGERANT-TO-COOLANT HEAT EXCHANGER (DUAL)
EXPANSION VALVE
CONTROLLER
DEGAS / BLEED
COOLANT
HIGH PRESSURE REFRIGERANT
LOW PRESSURE REFRIGERANT
CABIN HVAC
EAC COMPRESSOR
FAN(S)
CONDENSER(S)
RADIATOR
AGS
AIR
POWERTRAIN COOLING LOOP
EXPANSION VALVE

FIG. 6D