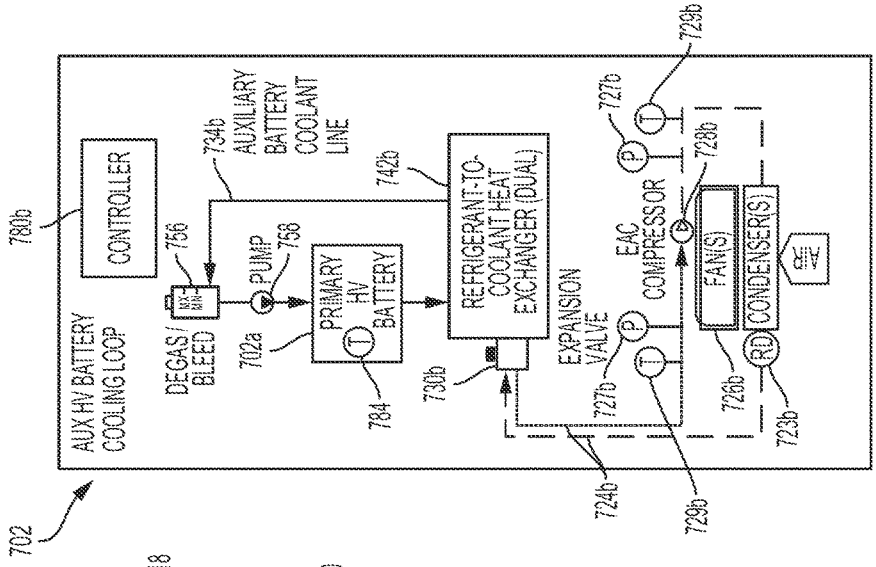
702
AUX HV BATTERY COOLING LOOP
780b
CONTROLLER
DEGAS/ BLEED
756
702a
PUMP
758
PRIMARY HV BATTERY
784
734b
AUXILIARY BATTERY COOLANT LINE
742b
REFRIGERANT-TO-COOLANT HEAT EXCHANGER (DUAL)
730b
EXPANSION VALVE
727b
724b
729b
EAC COMPRESSOR
728b
726b
FAN(S)
CONDENSER(S)
723b
727b
729b

FIG. 7C

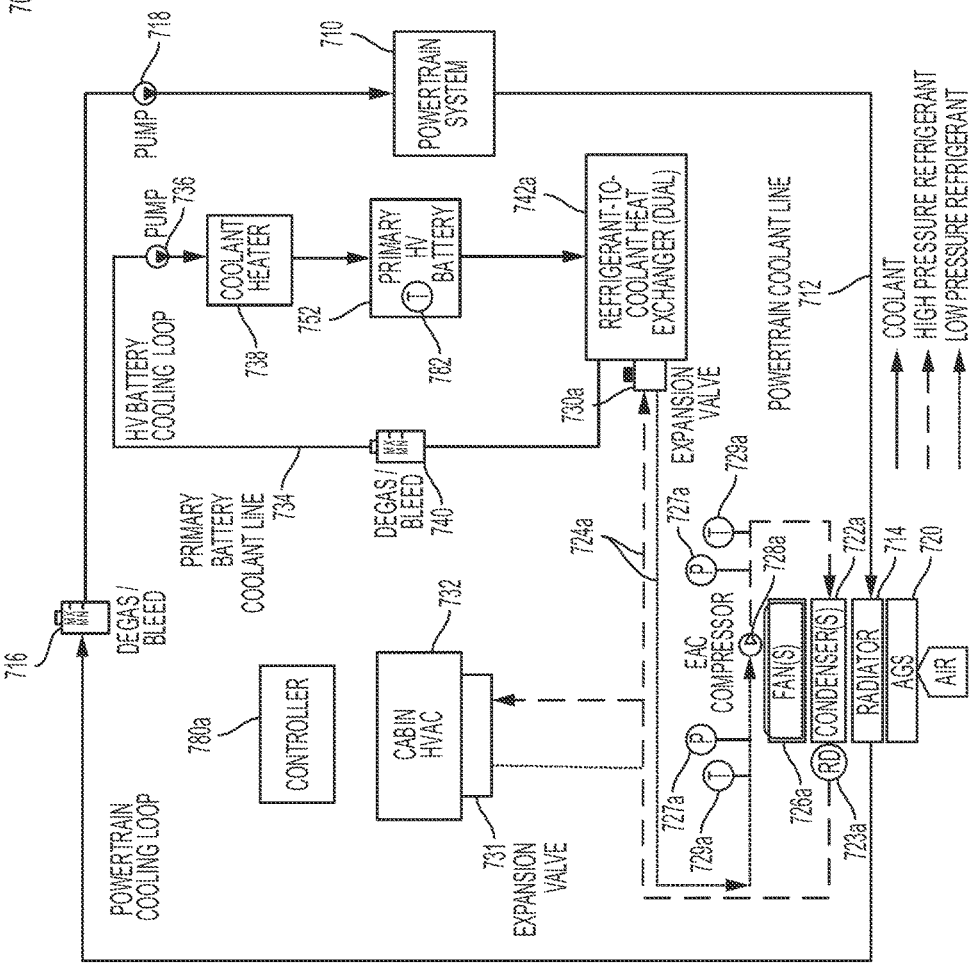
716
DEGAS/ BLEED
POWERTRAIN COOLING LOOP
780a
CONTROLLER
CABIN HVAC
732
731 EXPANSION VALVE
PRIMARY BATTERY COOLANT LINE
734
HV BATTERY COOLING LOOP
PUMP
736
COOLANT HEATER
738
752
PRIMARY HV BATTERY
782
DEGAS/ BLEED
740
PUMP
718
POWERTRAIN SYSTEM
710
742a
REFRIGERANT-TO-COOLANT HEAT EXCHANGER (DUAL)
730a
EXPANSION VALVE
POWERTRAIN COOLANT LINE
712
COOLANT
HIGH PRESSURE REFRIGERANT
LOW PRESSURE REFRIGERANT
724a
727a
729a
EAC COMPRESSOR
728a
FAN(S)
CONDENSER(S)
RADIATOR
AGS
AIR
722a
714
720
726a
723a

FIG. 7B