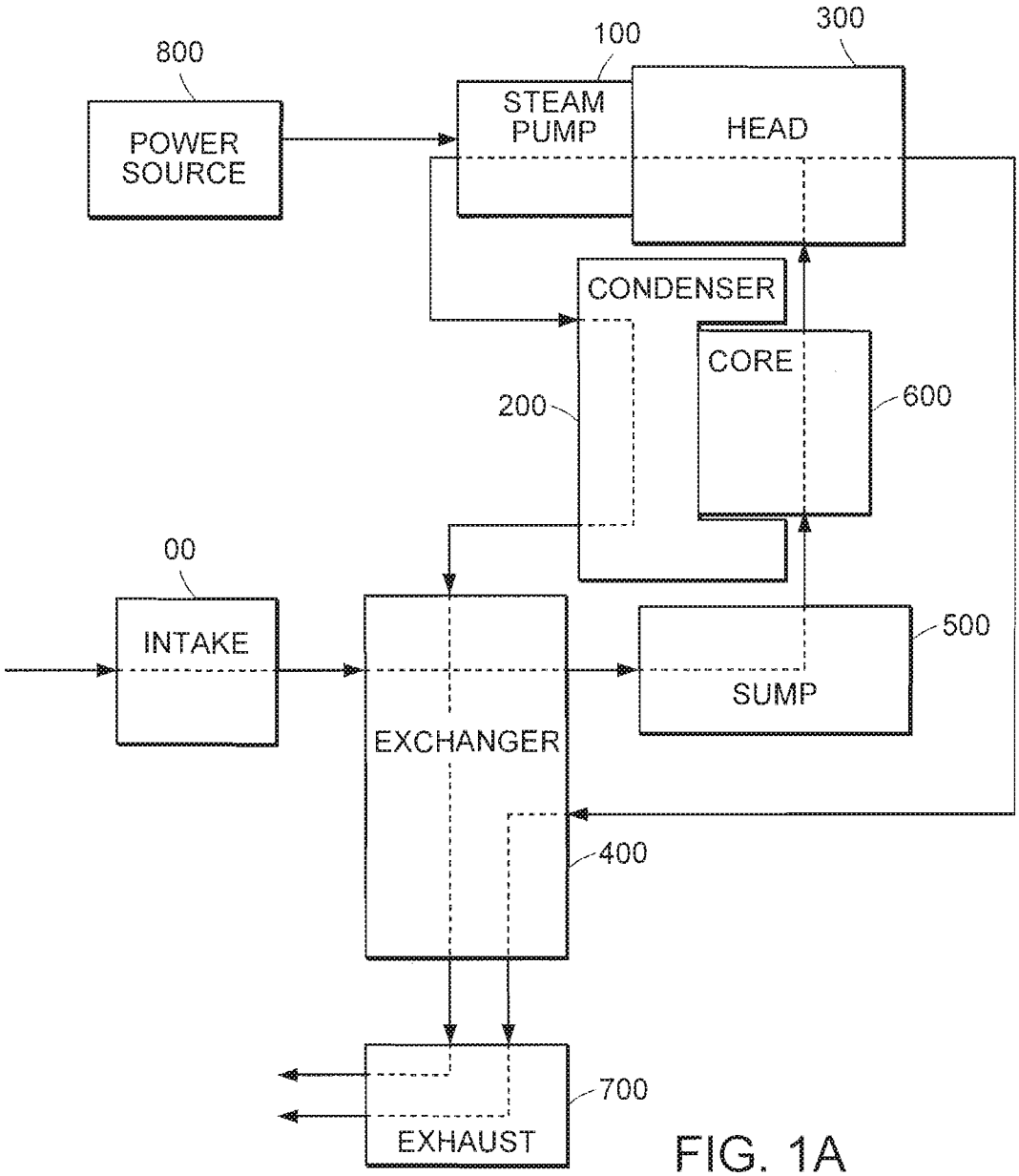
800
POWER SOURCE
100
STEAM PUMP
300
HEAD
CONDENSER
CORE
200
600
00
INTAKE
EXCHANGER
SUMP
500
400
700
EXHAUST

FIG. 1A

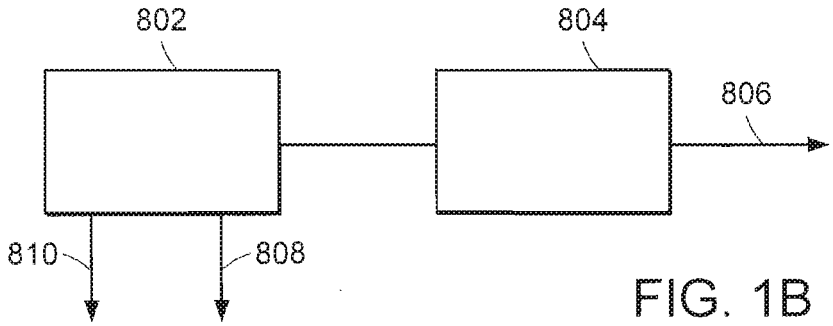
802
804
806
810
808

FIG. 1B