FIG 6

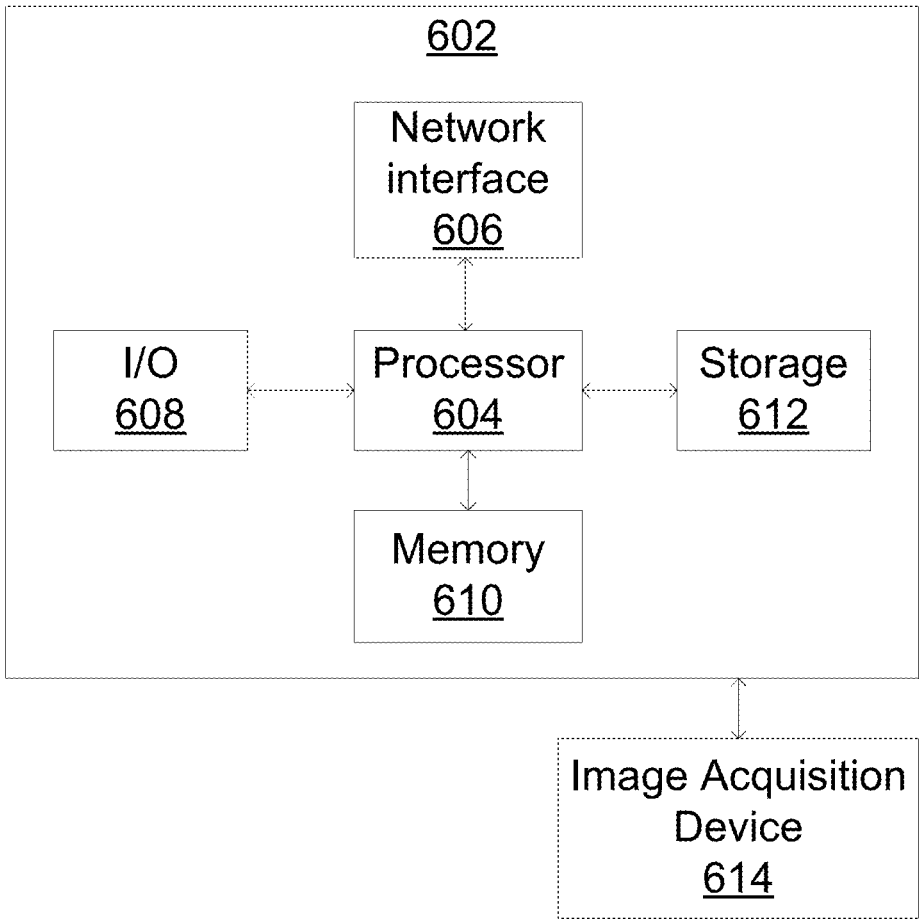
602
Network interface 606
I/O 608
Processor 604
Storage 612
Memory 610
Image Acquisition Device 614