FIG. 9

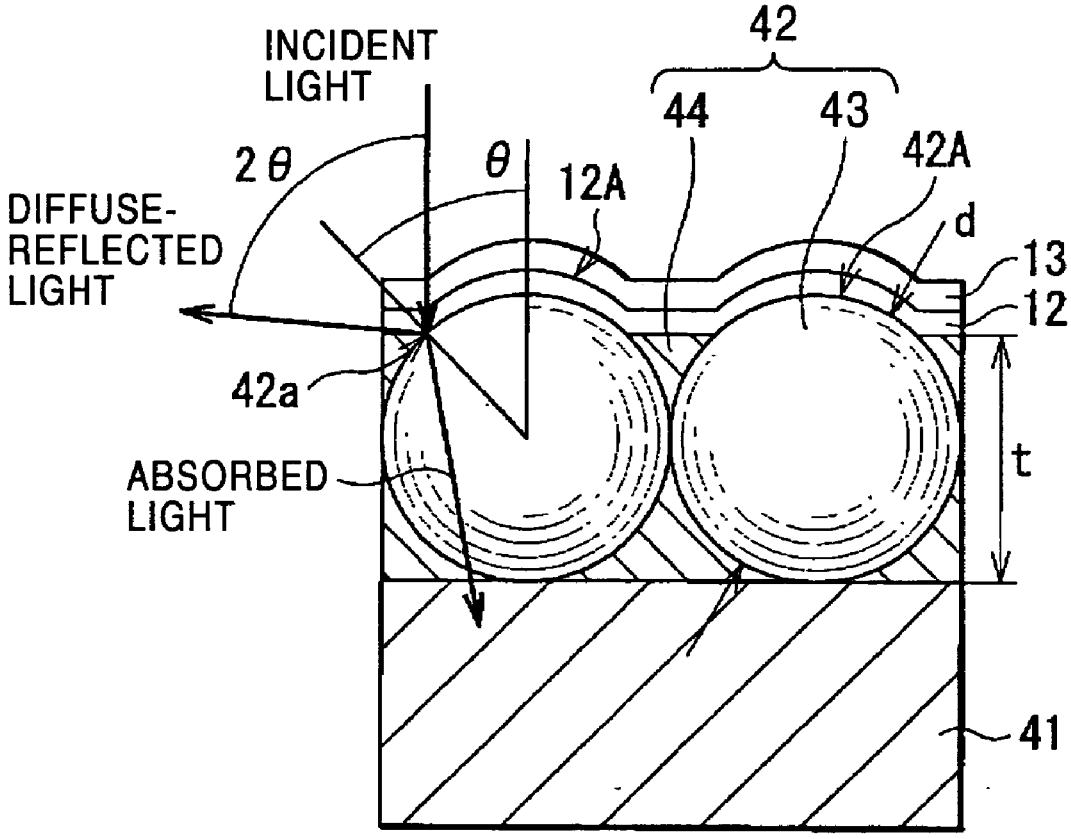
INCIDENT
LIGHT
42
44
43
42A
2θ
θ
12A
d
DIFFUSE-
REFLECTED
LIGHT
13
12
42a
t
ABSORBED
LIGHT
41