FIG. 3

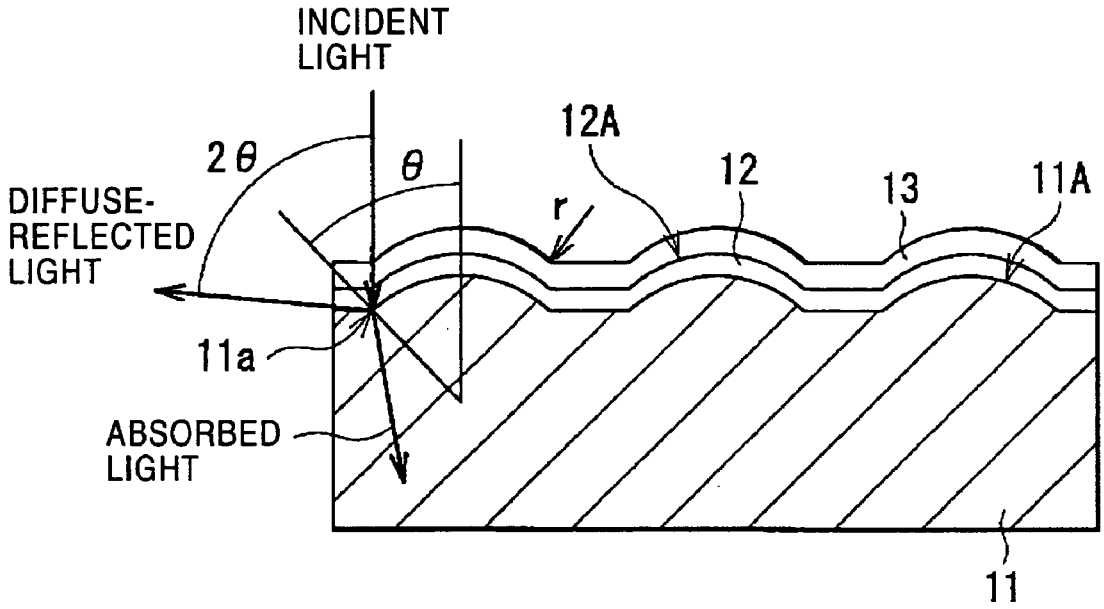
INCIDENT
LIGHT
2θ
θ
12A
12
13
11A
r
DIFFUSE-
REFLECTED
LIGHT
11a
ABSORBED
LIGHT
11