FIG. 16

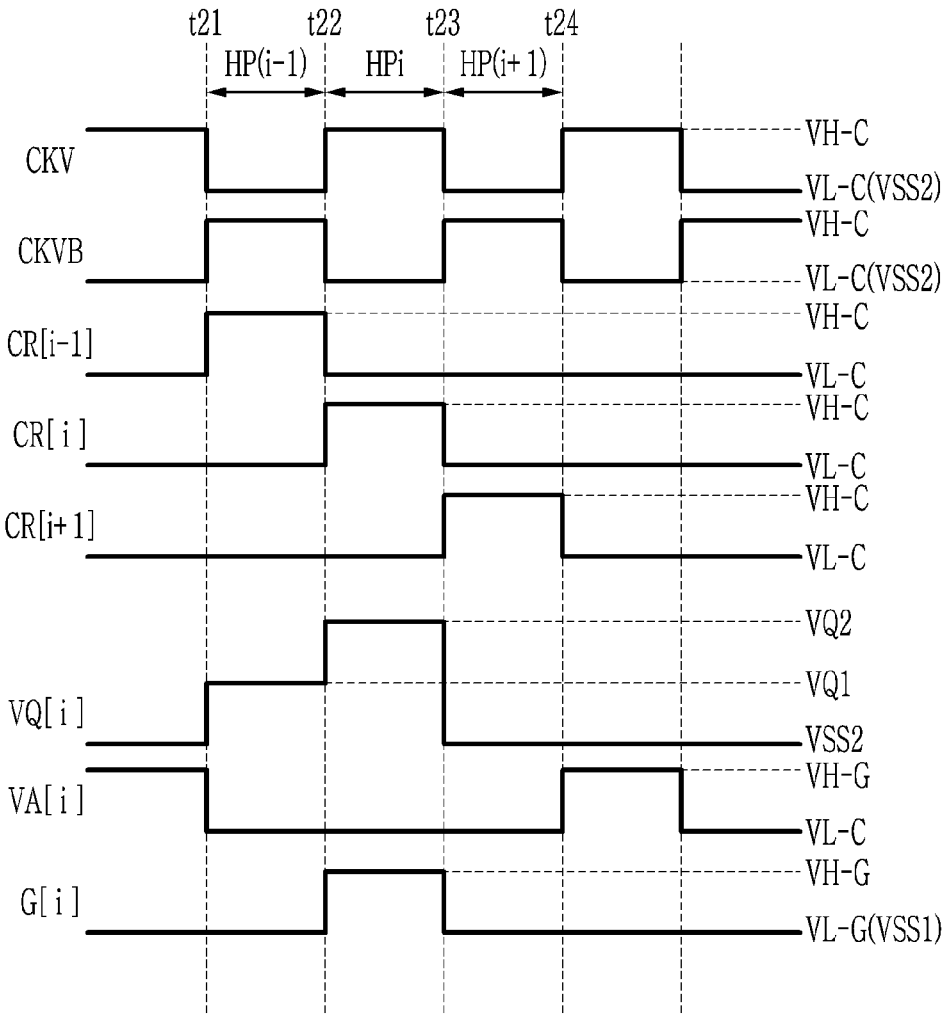
t21
t22
t23
t24
HP(i-1)
HPi
HP(i+1)
CKV
CKVB
CR[i-1]
CR[i]
CR[i+1]
VQ[i]
VA[i]
G[i]
VH-C
VL-C(VSS2)
VH-C
VL-C(VSS2)
VH-C
VL-C
VH-C
VL-C
VH-C
VL-C
VQ2
VQ1
VSS2
VH-G
VL-C
VH-G
VL-G(VSS1)