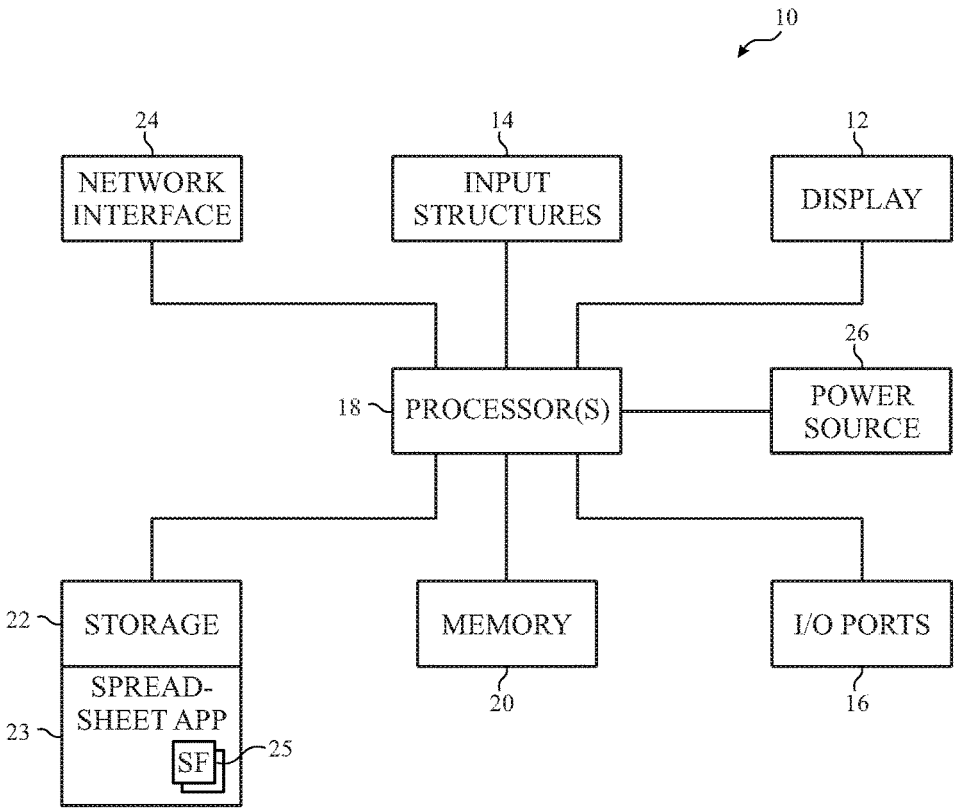
10
24
NETWORK INTERFACE
14
INPUT STRUCTURES
12
DISPLAY
26
18
PROCESSOR(S)
POWER SOURCE
22
STORAGE
MEMORY
I/O PORTS
SPREAD-SHEET APP
23
SF
25
20
16

FIG. 1