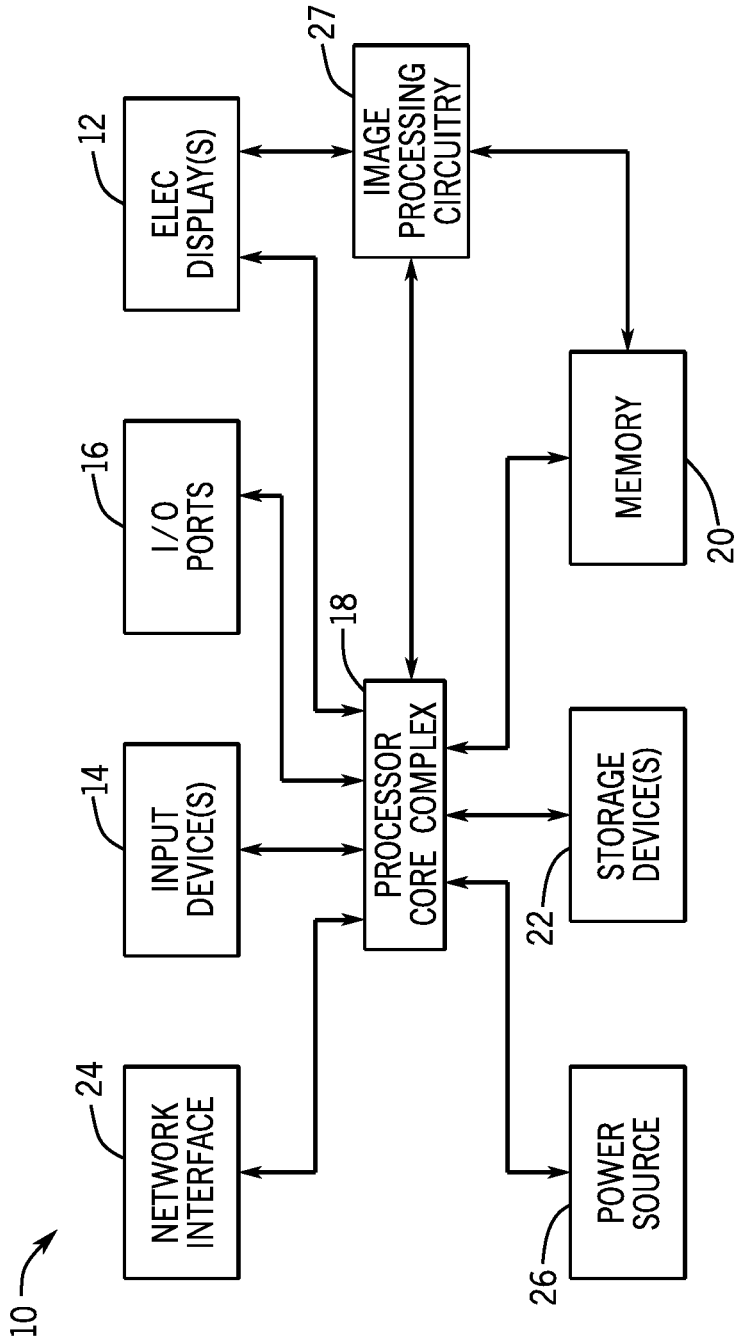
10
NETWORK INTERFACE
24
INPUT DEVICE(S)
14
I/O PORTS
16
ELEC DISPLAY(S)
12
PROCESSOR CORE COMPLEX
18
IMAGE PROCESSING CIRCUITRY
27
POWER SOURCE
26
STORAGE DEVICE(S)
22
MEMORY
20

FIG. 1