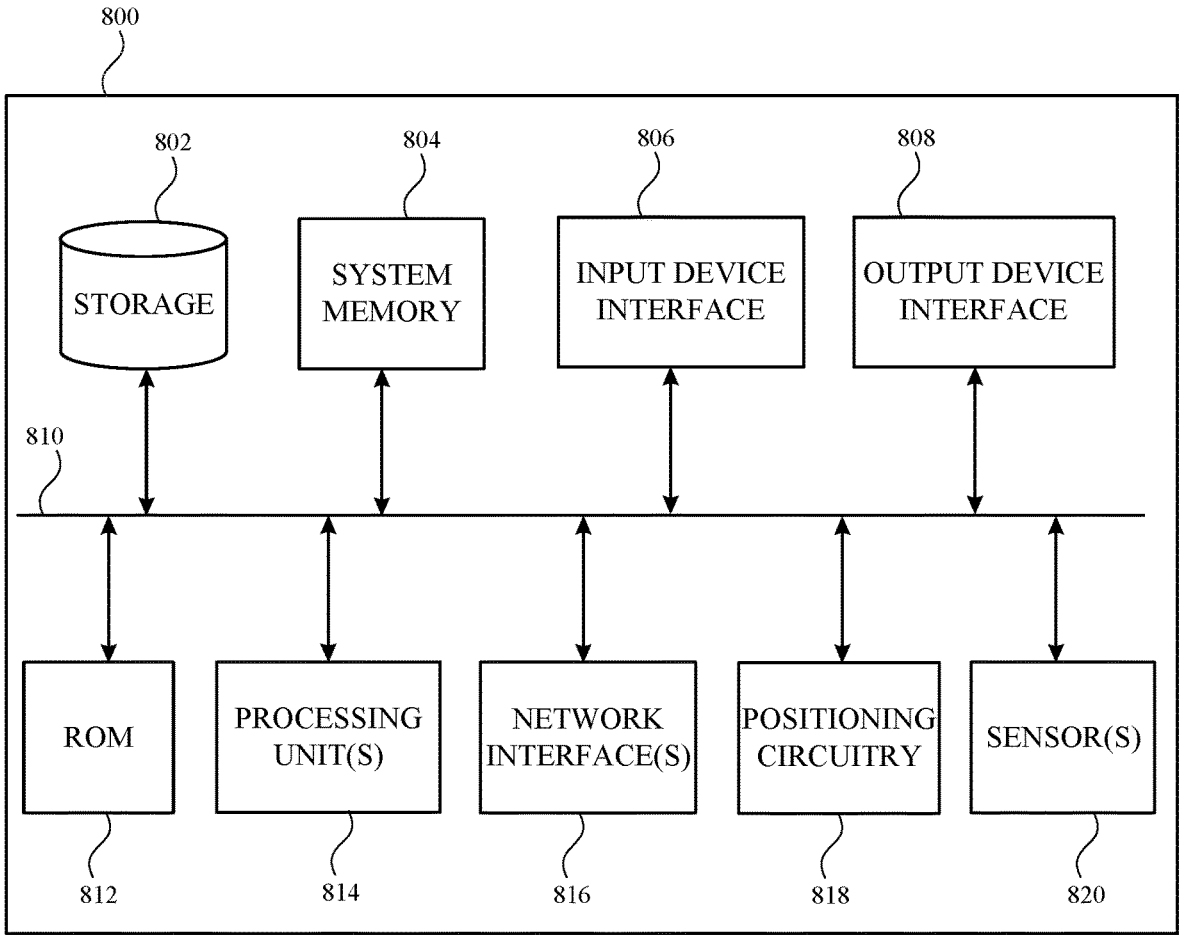
800
802
STORAGE
804
SYSTEM MEMORY
806
INPUT DEVICE INTERFACE
808
OUTPUT DEVICE INTERFACE
810
ROM
PROCESSING UNIT(S)
NETWORK INTERFACE(S)
POSITIONING CIRCUITRY
SENSOR(S)
812
814
816
818
820

FIG. 8