US 20210005337A1

(19) United States

(12) Patent Application Publication

Kamen

(10) Pub. No.: US 2021/0005337 A1

(43) Pub. Date: Jan. 7, 2021

(54) **COMPRESSION MEMBER FOR BIOHAZARDOUS MATERIAL TRANSPORTING PIG**

(71) Applicant: **Robert Kamen**, Toronto (CA)

(72) Inventor: **Robert Kamen**, Toronto (CA)

(21) Appl. No.: **16/979,500**

(22) PCT Filed: **Mar. 6, 2019**

(86) PCT No.: **PCT/CA2019/050274**

§ 371 (c)(1),
(2) Date: **Sep. 9, 2020**

Related U.S. Application Data

(60) Provisional application No. 62/640,683, filed on Mar. 9, 2018.

Publication Classification

(51) **Int. Cl.**

G21F 5/015	(2006.01)
G21F 5/14	(2006.01)
G21F 5/12	(2006.01)

(52) **U.S. Cl.**

CPC ***G21F 5/015*** (2013.01); *A61J 1/16* (2013.01); ***G21F 5/12*** (2013.01); ***G21F 5/14*** (2013.01)

(57) **ABSTRACT**
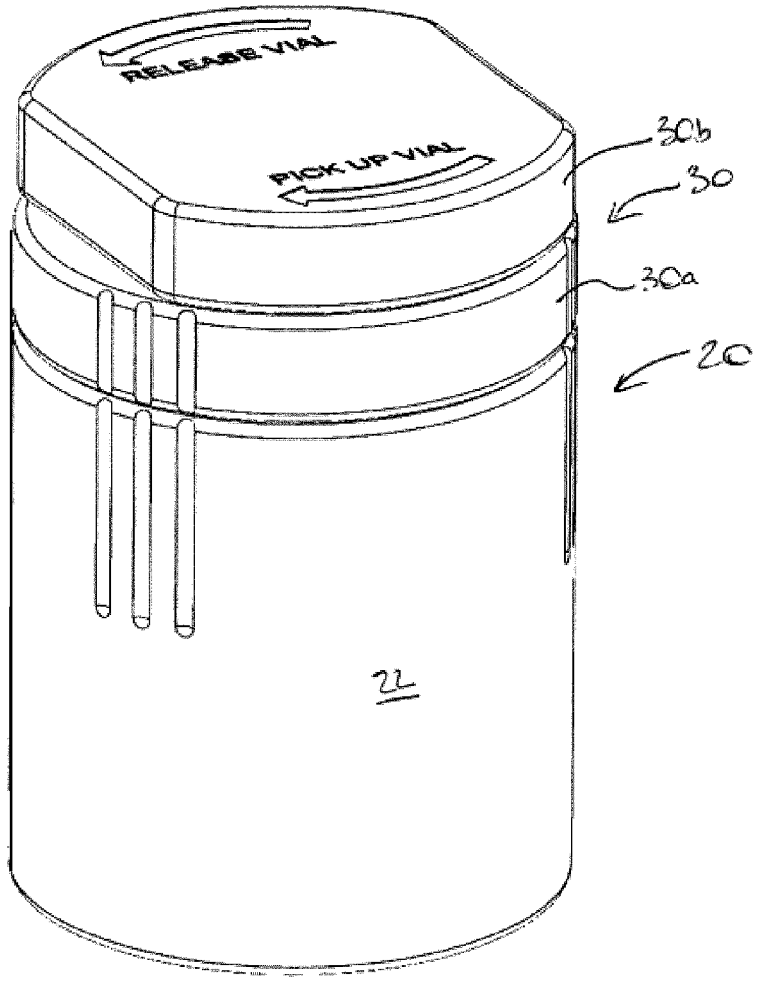
A compression member for insertion into a pig for transporting a container of biohazardous materials includes a flange maintained in spaced relation with an annulus by pillars; and spaced apart pivotable grip components supported by the annulus and extending downwards from the annulus between respective ones of the pillars towards, but not into contact with, the flange, the pivotable grip components resiliently compressible inwardly against the container when the container is received within the compression member. In use, the compression member receives at least a closure portion of the container and, in turn, is itself received within a complementary annulus of the pig. When being received within the complementary annulus of the pig, the pivotable grip components are urged inwards towards the container thereby to grip the container and provide a spacer for between this portion of the container and the pig.