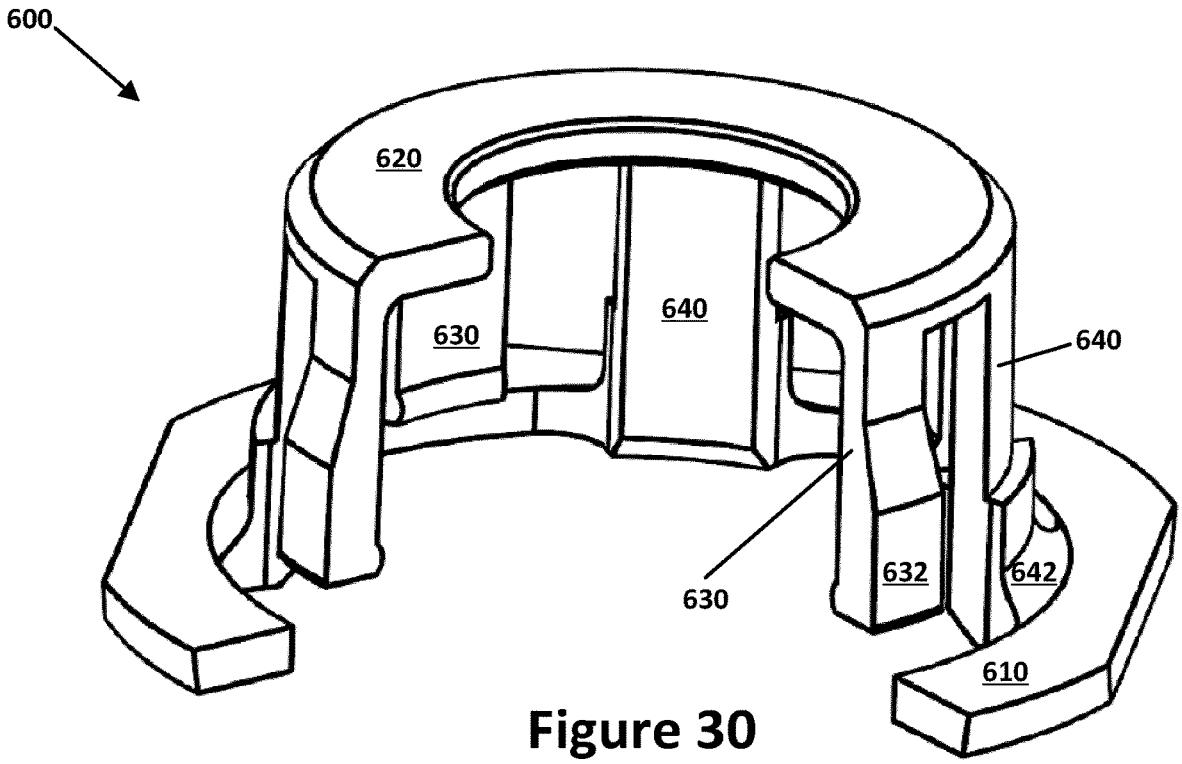

Figure 30

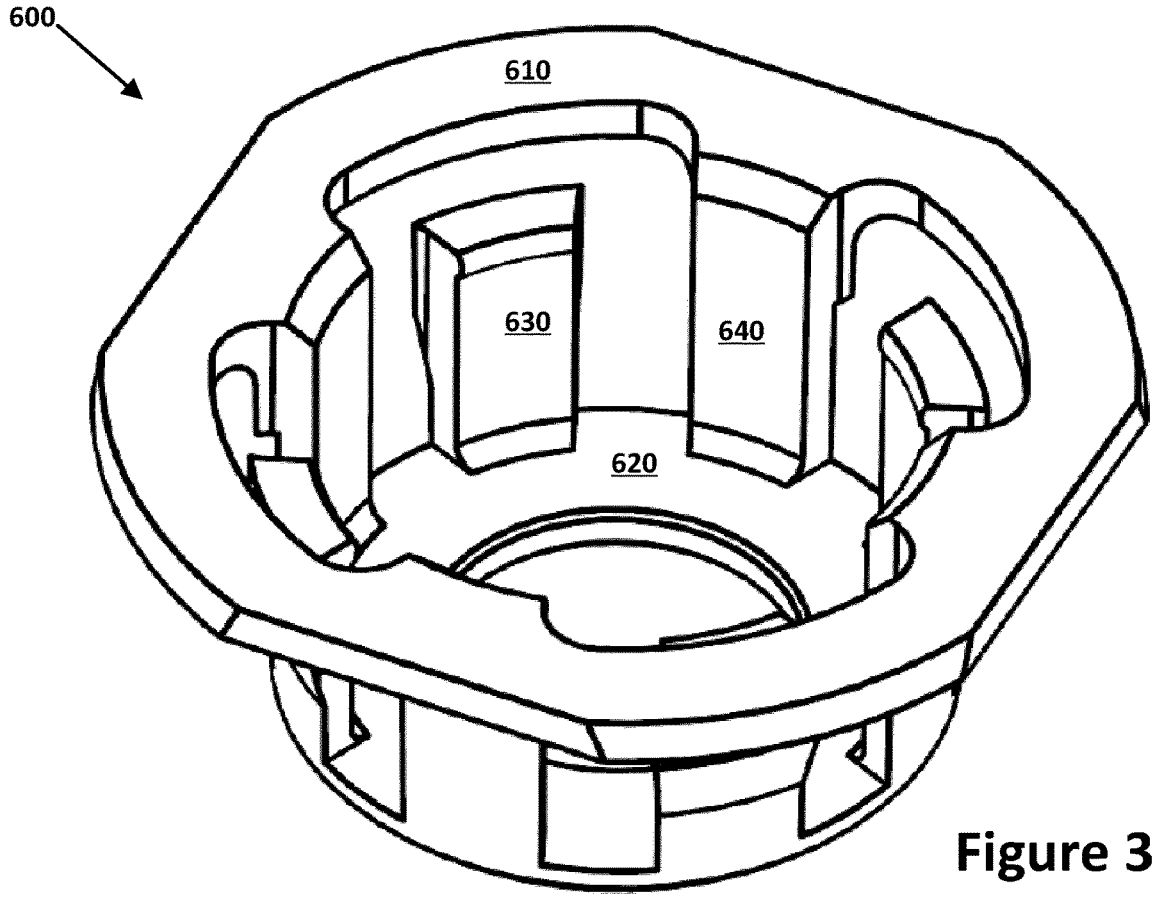

Figure 31