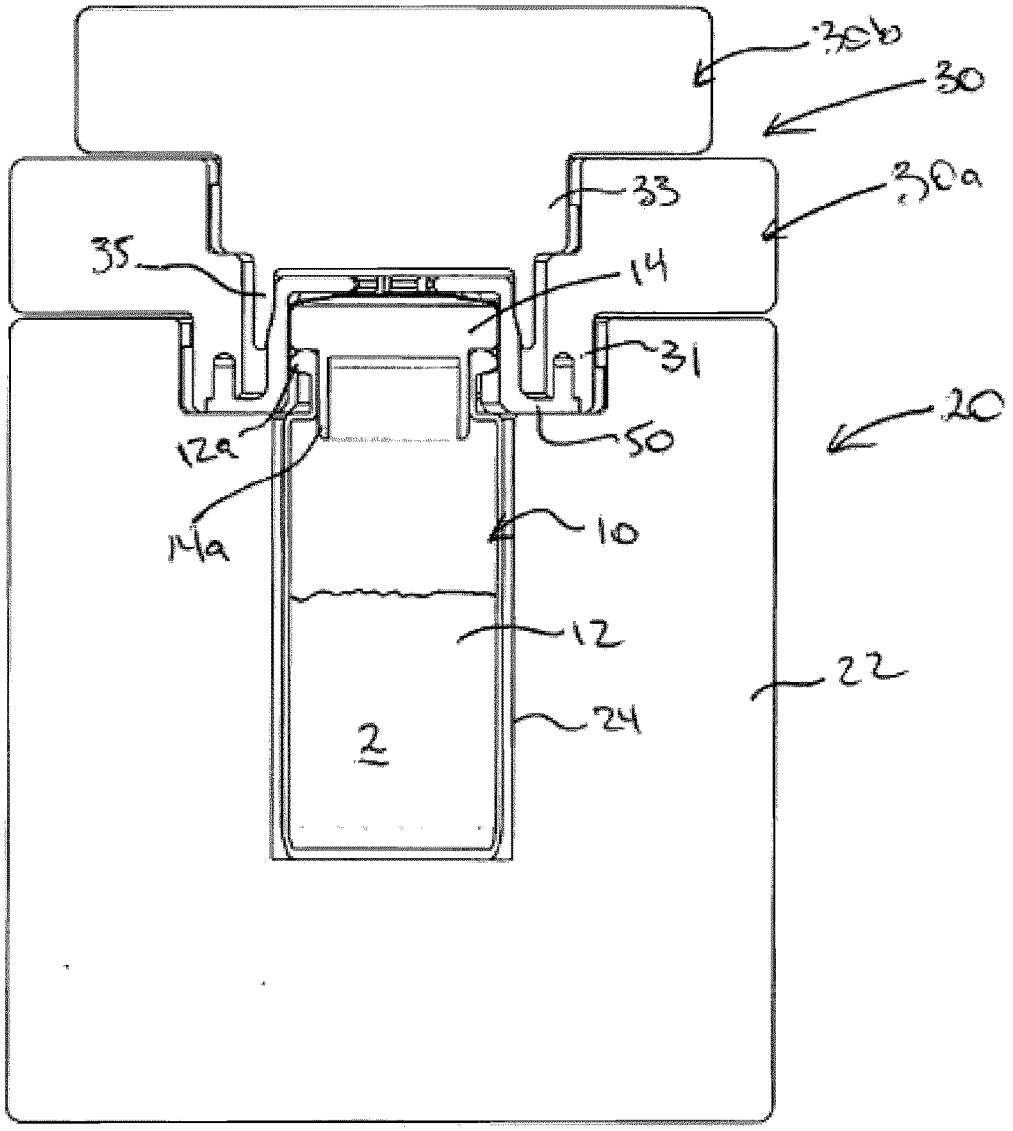

Figure 2