US 20210318537A1

(19) United States

(12) Patent Application Publication

(10) Pub. No.: US 2021/0318537 A1

(43) Pub. Date: Oct. 14, 2021

Kim et al.

(54) **WIDE ANGLE AUGMENTED REALITY DISPLAY**

(71) Applicant: **NVIDIA Corporation**, Santa Clara, CA (US)

(72) Inventors: **Jonghyun Kim**, Palo Alto, CA (US); **Morgan Samuel McGuire**, Waterloo (CA)

(21) Appl. No.: **16/844,648**

(22) Filed: **Apr. 9, 2020**

Publication Classification

(51) **Int. Cl.**

G02B 27/01 (2006.01)

G02B 27/09 (2006.01)

(52) **U.S. Cl.**

CPC ***G02B 27/0103*** (2013.01); ***G02B 27/0172*** (2013.01); ***G02B 27/0972*** (2013.01); *G02B 2027/0178* (2013.01); *G02B 2027/0123* (2013.01); *G02B 2027/0109* (2013.01); *G02B 2027/0174* (2013.01); ***G02B 27/0944*** (2013.01)

(57) **ABSTRACT**
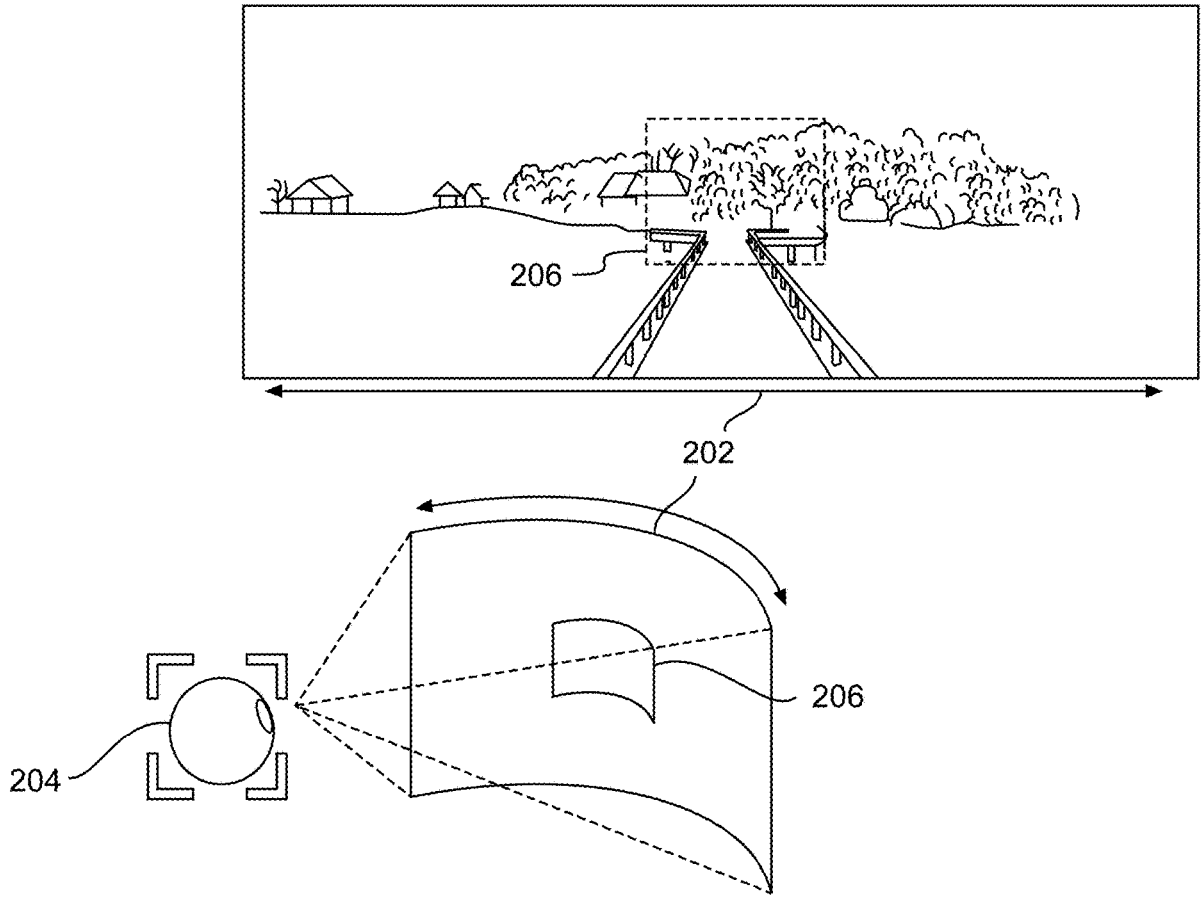
In an embodiment, an augmented reality display provides an expanded eye box and enlarged field of view through the use of holographic optical elements. In at least one example, an incoupling element directs an image into a waveguide, which transmits the image to a set of outcoupling gratings. In one example, a set of holographic optical elements opposite the outcoupling elements reflect the image to the user with an enlarged field of view while maintaining an expanded eye box.