US 20190201638A1

(19) United States

(12) Patent Application Publication

Kamen et al.

(10) Pub. No.: US 2019/0201638 A1

(43) Pub. Date: Jul. 4, 2019

(54) **ADHESIVE AND PERIPHERAL SYSTEMS AND METHODS FOR MEDICAL DEVICES**

(71) Applicant: **DEKA Products Limited Partnership**, Manchester, NH (US)

(72) Inventors: **Dean Kamen**, Bedford, NH (US); **Larry B. Gray**, Merrimack, NH (US); **Russell H. Beavis**, Merrimack, NH (US)

(21) Appl. No.: **16/298,565**

(22) Filed: **Mar. 11, 2019**

Related U.S. Application Data

(63) Continuation of application No. 15/043,094, filed on Feb. 12, 2016, now Pat. No. 10,226,587, which is a (Continued)

Publication Classification

(51) **Int. Cl.**

A61M 5/50 (2006.01)
F04B 43/02 (2006.01)

(Continued)

(52) **U.S. Cl.**

CPC ***A61M 5/5086*** (2013.01); ***F04B 43/02*** (2013.01); ***A61J 1/20*** (2013.01); ***A61B 5/1427*** (2013.01); ***A61M 5/16804*** (2013.01); ***A61M 5/14216*** (2013.01); ***A61M 5/365*** (2013.01); ***A61M 5/162*** (2013.01); ***A61M 5/1413*** (2013.01); ***G01F 22/00*** (2013.01); ***A61M 5/16813*** (2013.01); ***A61M 5/14212*** (2013.01); ***A61B 5/0024*** (2013.01); ***A61B 5/6833*** (2013.01); ***A61M 5/16831*** (2013.01); ***A61M 5/142*** (2013.01); ***A61M 5/1723*** (2013.01); ***A61M 5/158*** (2013.01); ***A61M 5/14244*** (2013.01); ***A61M 5/1452*** (2013.01); ***A61M 5/168*** (2013.01); ***A61M 5/172*** (2013.01); ***H04B 7/2609*** (2013.01); ***G08C 17/02*** (2013.01); ***A61M 5/16886*** (2013.01); ***A61M 5/16809*** (2013.01); ***A61M 5/14586*** (2013.01); ***A61M 5/14248*** (2013.01); ***A61M 5/14224*** (2013.01); ***G05D 7/0676*** (2013.01); ***G05D 7/0647*** (2013.01); ***G05B 23/02*** (2013.01); *Y10T 29/49828* (2015.01); *A61M 2205/3331* (2013.01); *Y10T 29/494* (2015.01); *Y10T 29/49236* (2015.01); *Y10T 29/49412* (2015.01); *A61M 2005/1583* (2013.01); *A61M 2005/14252* (2013.01); *A61M 2205/8206* (2013.01); *A61M 2005/1402* (2013.01); *A61M 2205/16* (2013.01); *A61M 2205/581* (2013.01); *A61M 2205/582* (2013.01); *A61M 2205/583* (2013.01); *A61M 2005/14506* (2013.01); *A61M 2205/3368* (2013.01); *A61M 2005/1585* (2013.01); *A61M 2005/1586* (2013.01); *A61M 2205/3337* (2013.01); *A61M 2230/201* (2013.01); *A61M 2205/3303* (2013.01); *A61M 2205/3379* (2013.01); *A61M 2205/50* (2013.01); *A61M 2005/14208* (2013.01); *A61M 2205/3592* (2013.01); *A61M 2205/3523* (2013.01); *A61M 2205/3569* (2013.01); *A61M 2005/16863* (2013.01); *A61M 2205/04* (2013.01); *A61M 2205/502* (2013.01); *A61M 2205/52* (2013.01); *A61B 2560/0412* (2013.01); *A61M 2207/00* (2013.01); *A61M 2205/18* (2013.01); *A61M 2205/0294* (2013.01);

(Continued)

(57) **ABSTRACT**
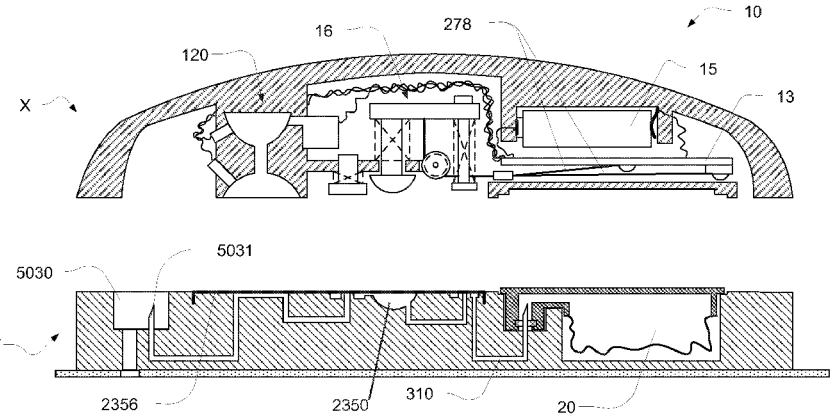
A repeater system may control a pump by using a repeater and a user interface. An adhesive patch system may be used for affixing a pump or other object to a human body. Such an adhesive patch system may include two sets of adhesive members, each member including an adhesive material on at least one side so as to attach to the body. The members of the first set are spaced to allow the members of the second set to attach to the body in spaces provided between the members of the first set, and the members of the second set are spaced to allow members of the first set to detach from the body without detaching the members of the second set. Also, fill stations and base stations are provided for personal pump systems.