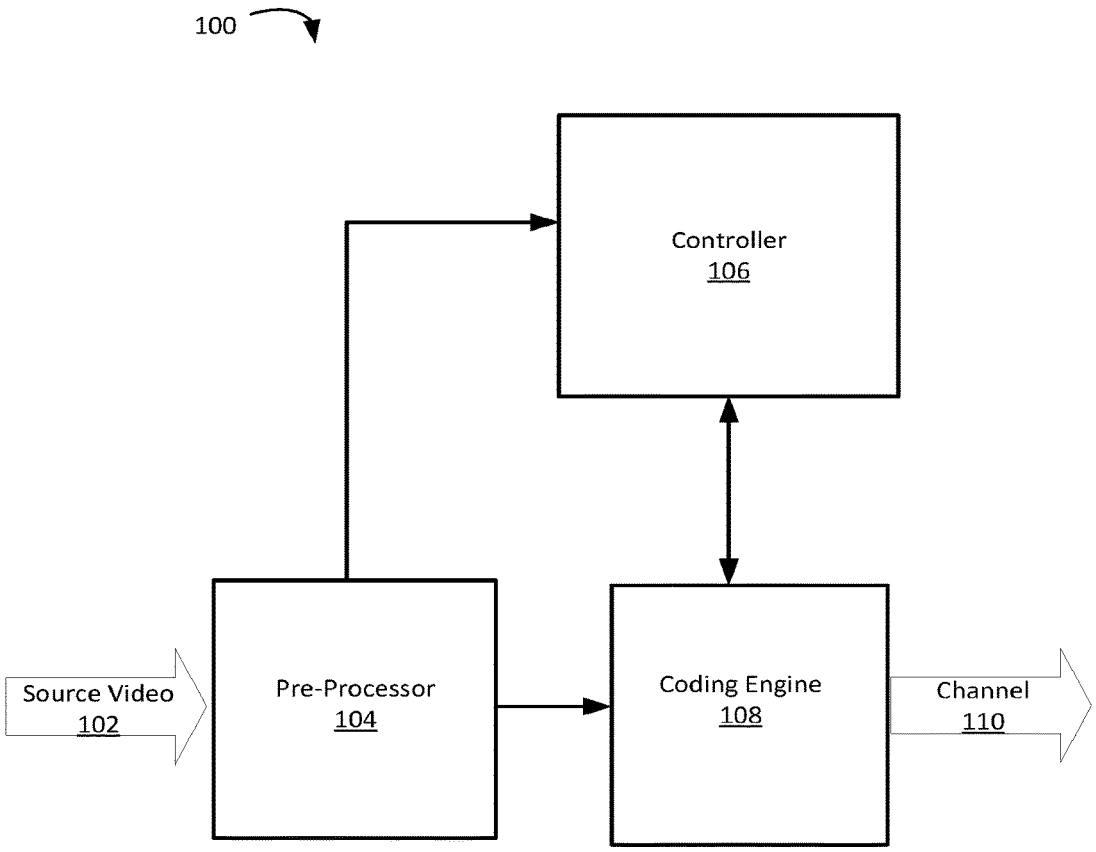
100
Controller
106
Source Video
102
Pre-Processor
104
Coding Engine
108
Channel
110

FIG. 1