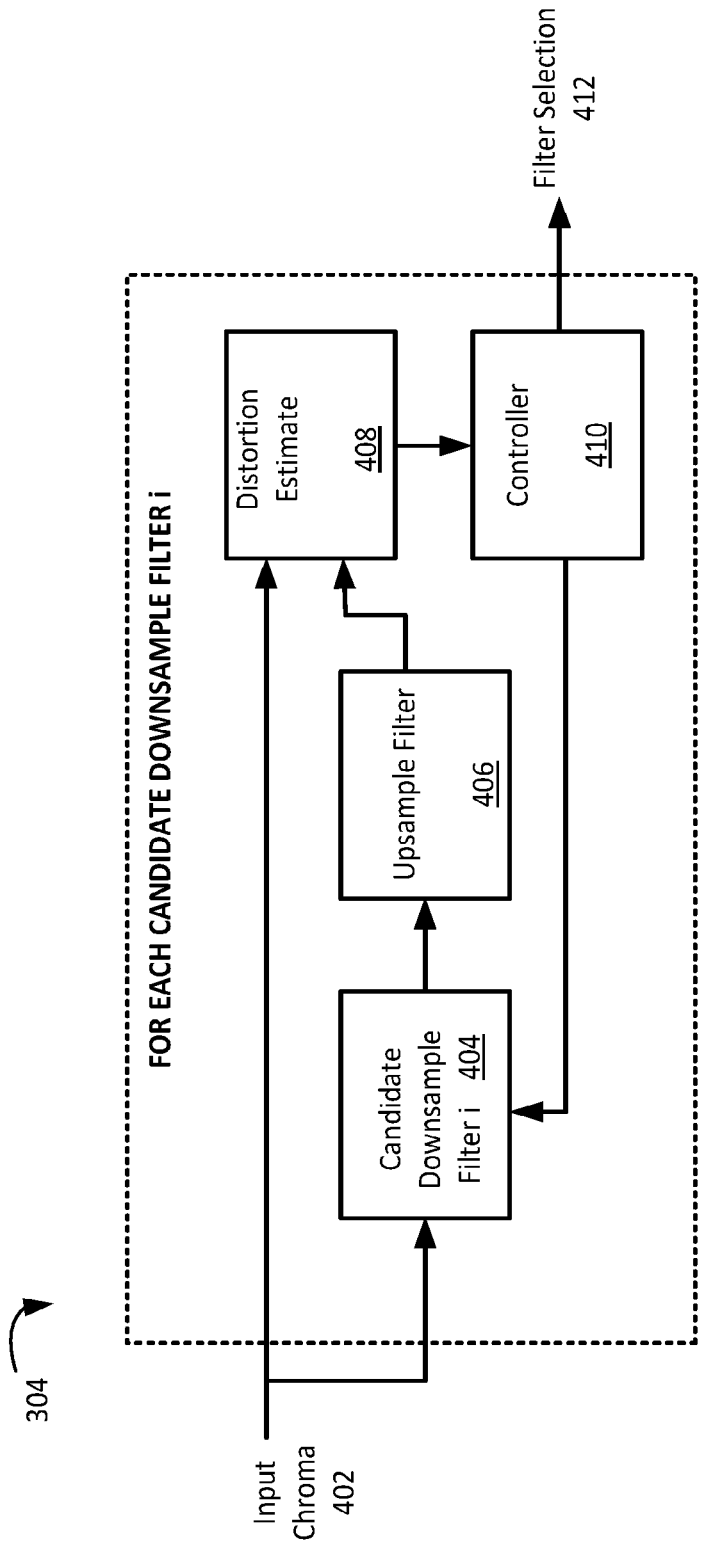
304
Input Chroma 402
FOR EACH CANDIDATE DOWNSAMPLE FILTER i
Candidate Downsample Filter i 404
Upsample Filter 406
Distortion Estimate 408
Controller 410
Filter Selection 412

FIG. 4