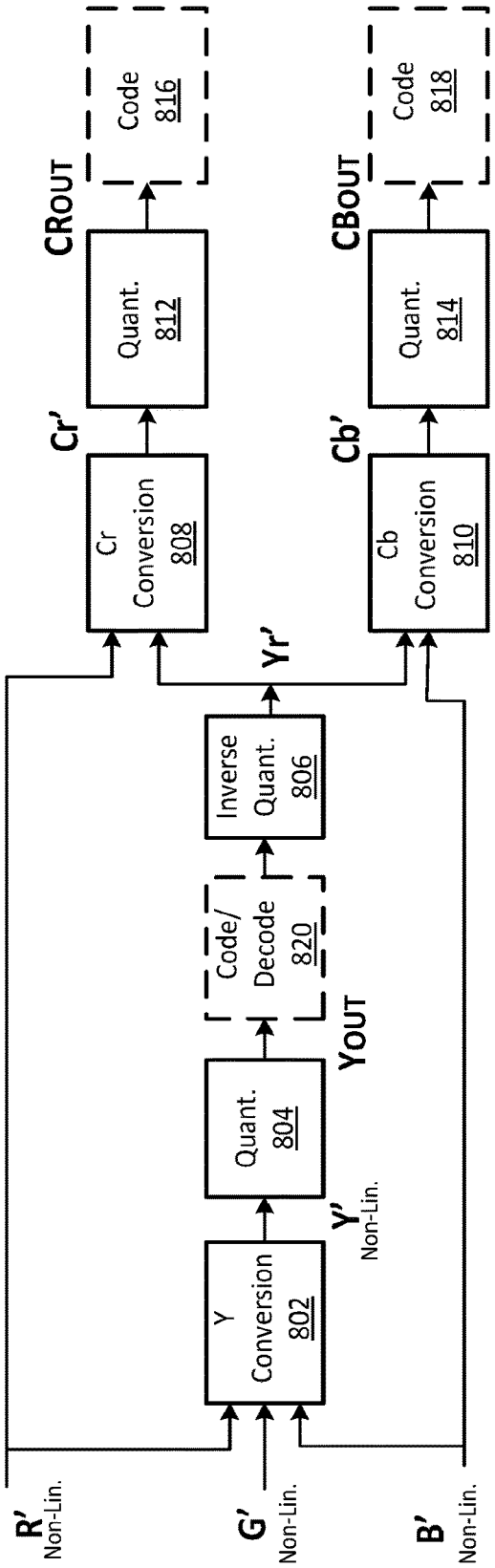
R'
Non-Lin.
G'
Non-Lin.
B'
Non-Lin.
Y
Conversion
802
Y'
Non-Lin.
Quant.
804
Code/
Decode
820
YOUT
Inverse
Quant.
806
Yr'
Cr
Conversion
808
Cr'
Quant.
812
CROUT
Code
816
Cb
Conversion
810
Cb'
Quant.
814
CBOUT
Code
818

FIG. 8