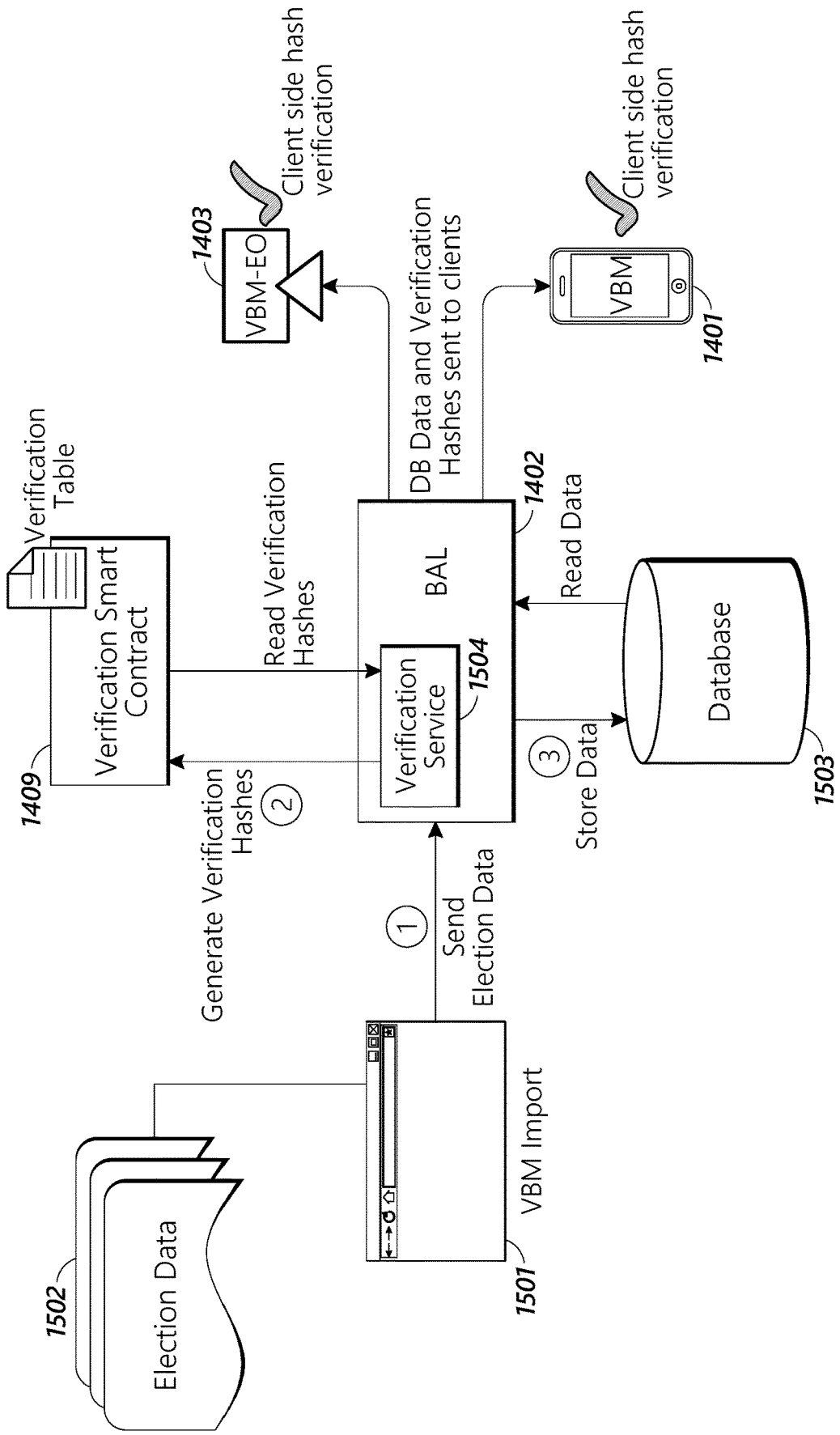
Client side hash verification
1403
VBM-EO
Client side hash verification
VBM
1401
DB Data and Verification Hashes sent to clients
Verification Table
Verification Smart Contract
1409
Read Verification Hashes
BAL
1402
Read Data
Verification Service
1504
Database
1503
Generate Verification Hashes
2
3
Store Data
1
Send Election Data
Election Data
1502
VBM Import
1501

FIG. 15