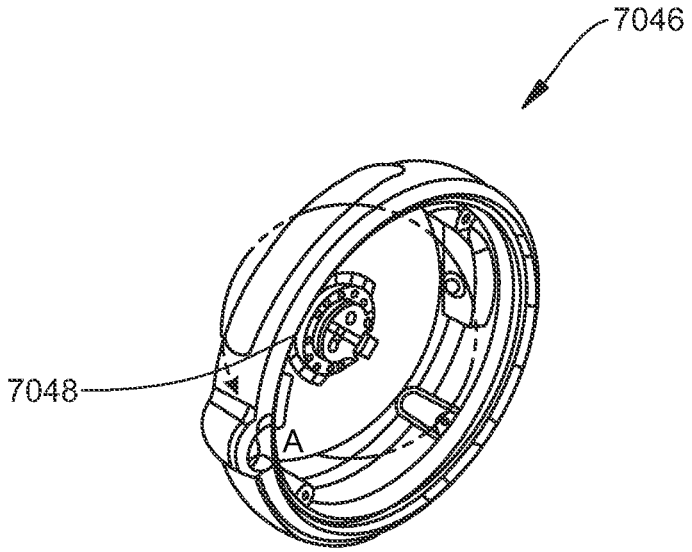

FIG. 246A

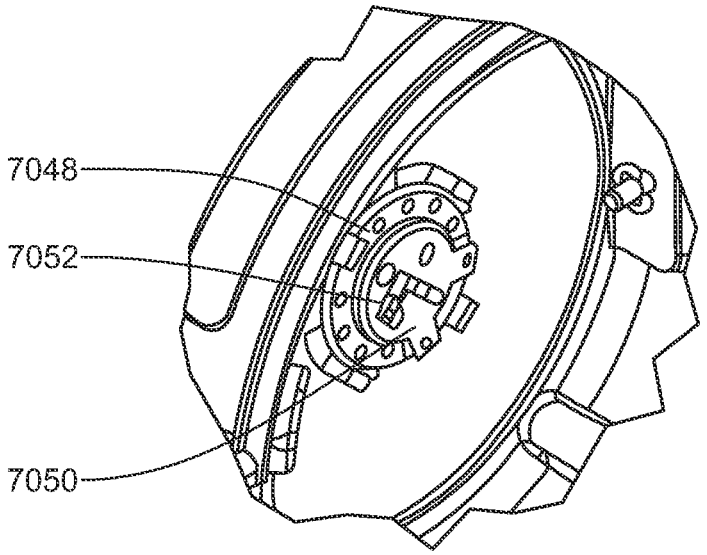

DETAIL G
SCALE 2:1
Speaker Mounting

FIG. 246B