US 20210366440A1

(19) United States

(12) Patent Application Publication

BURNS et al.

(10) Pub. No.: US 2021/0366440 A1

(43) Pub. Date: Nov. 25, 2021

(54) **CONTROLLING DISPLAYS**

(71) Applicant: **Apple Inc.**, Cupertino, CA (US)

(72) Inventors: **Aaron Mackay BURNS**, Sunnyvale, CA (US); **Alexis H. PALANGIE**, Palo Alto, CA (US); **Pol PLA I CONESA**, Belmont, CA (US); **David M. SCHATTEL**, Santa Clara, CA (US)

(21) Appl. No.: **17/397,734**

(22) Filed: **Aug. 9, 2021**

Related U.S. Application Data

(63) Continuation of application No. PCT/US2020/048845, filed on Aug. 31, 2020.

(60) Provisional application No. 63/058,238, filed on Jul. 29, 2020, provisional application No. 62/906,465, filed on Sep. 26, 2019.

Publication Classification

(51) **Int. Cl.**

G09G 5/373	(2006.01)
G06T 19/00	(2006.01)
G06F 1/16	(2006.01)

(52) **U.S. Cl.**

CPC ***G09G 5/373*** (2013.01); ***G06T 19/006*** (2013.01); *G09G 2360/04* (2013.01); *G09G 2340/045* (2013.01); ***G06F 1/163*** (2013.01)

(57) **ABSTRACT**
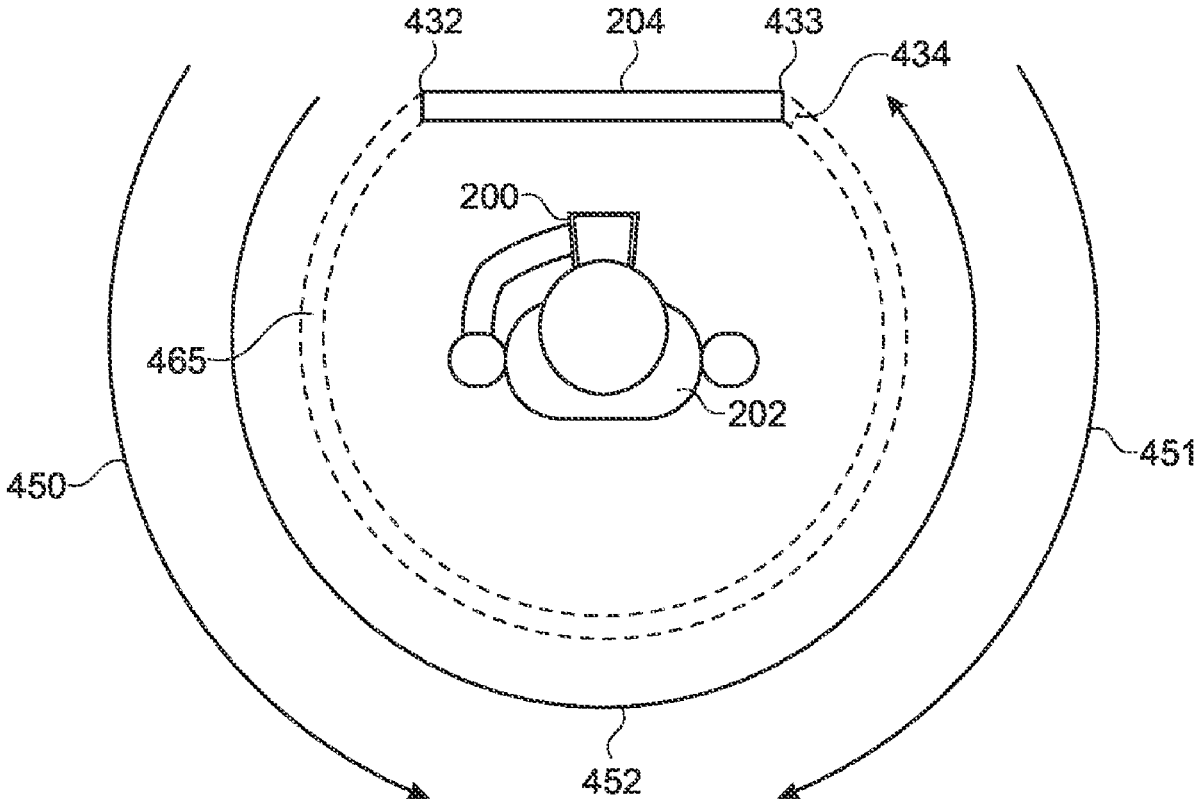
In accordance with some embodiments, an exemplary process for dynamically controlling the size of a display based on a moving of a visual object meeting a criterion in a computer-generated reality (CGR) environment is described.