US 20210338740A1

(19) United States

(12) Patent Application Publication

ABERMAN et al.

(10) Pub. No.: US 2021/0338740 A1

(43) Pub. Date: Nov. 4, 2021

(54) THERAPEUTIC METHODS AND COMPOSITIONS

(71) Applicant: **PLURISTEM LTD.**, Haifa (IL)

(72) Inventors: **Zami ABERMAN**, Tel-Mond (IL); **Yaacob YANAY**, Shimshit (IL); **Rachel OFIR**, Adi (IL); **Marc TRITEL**, Bet Shemesh (IL); **Hoshea Yissachar ALLEN**, Bet Shemesh (IL); **Niva SHRAGA HELED**, Nahariya (IL)

(73) Assignee: **PLURISTEM LTD.**, Haifa (IL)

(21) Appl. No.: **17/283,026**

(22) PCT Filed: **Nov. 6, 2019**

(86) PCT No.: **PCT/IB2019/059544**

§ 371 (c)(1),
(2) Date: **Apr. 6, 2021**

Related U.S. Application Data

(60) Provisional application No. 62/757,222, filed on Nov. 8, 2018.

Publication Classification

(51) **Int. Cl.**
A61K 35/50 (2006.01)

(52) **U.S. Cl.**
CPC *A61K 35/50* (2013.01)

(57) **ABSTRACT**
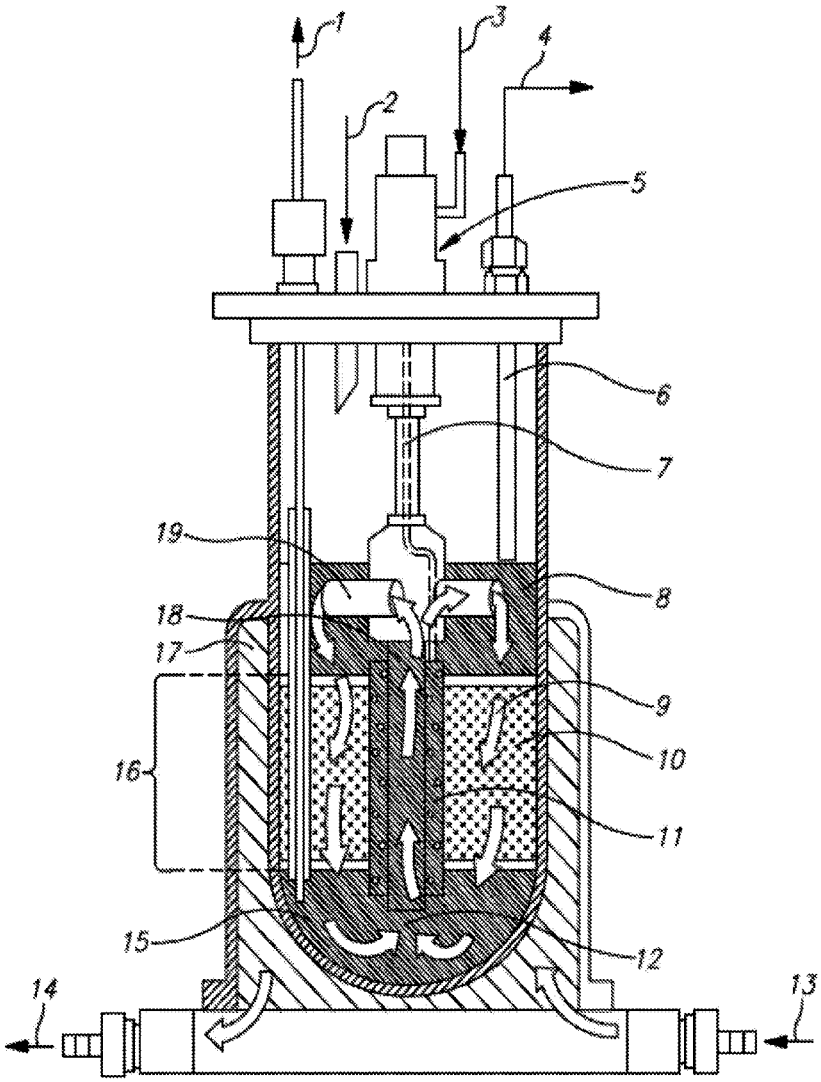
Disclosed herein are pharmaceutical compositions and methods comprising or utilizing placental adherent stromal cells. The pharmaceutical compositions may be indicated for ameliorating or treating various disorders, e.g., impaired glucose tolerance. Alternatively, the pharmaceutical composition may be indicated for ameliorating or treating systemic inflammation, e.g., in a subject with impaired glucose tolerance. The pharmaceutical compositions may further include pharmacologically acceptable excipients.